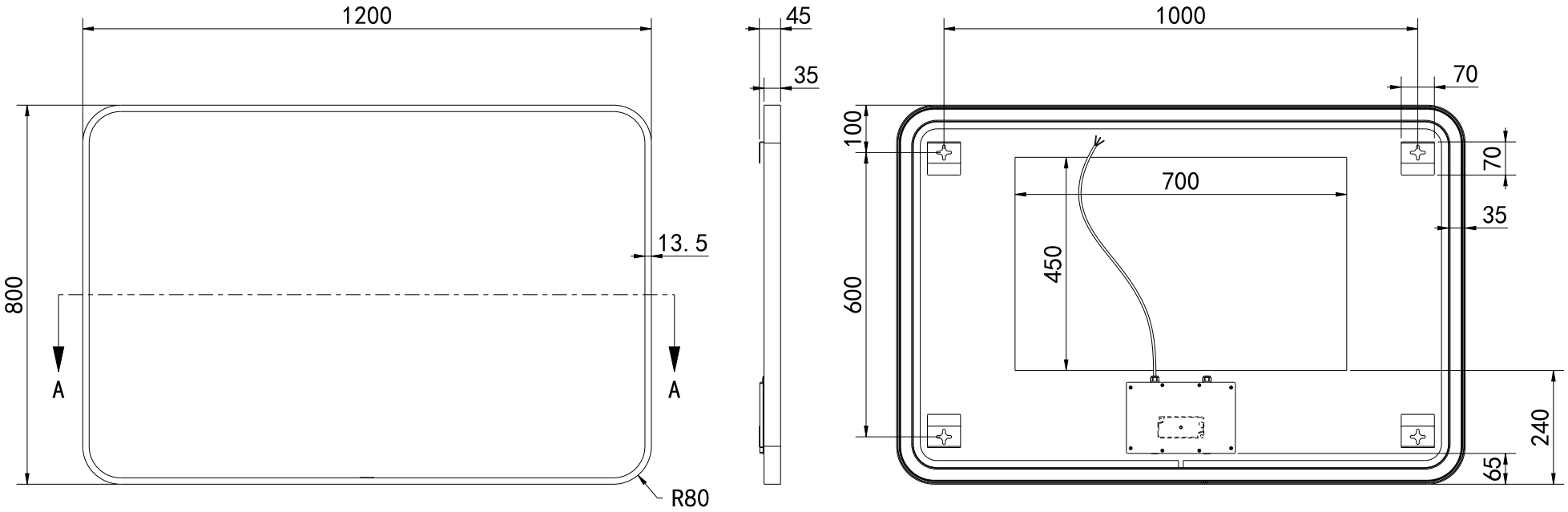

hotbath Italian bathroomware	Spiegel in aluminium frame / Soft Square, incl. direct & indirect LED, spiegelverwarming, color changing, dimbaar, dottless, met afstandsbediening	Mirror 1200*800 mm Drawing unit: mm	**SSQ128**