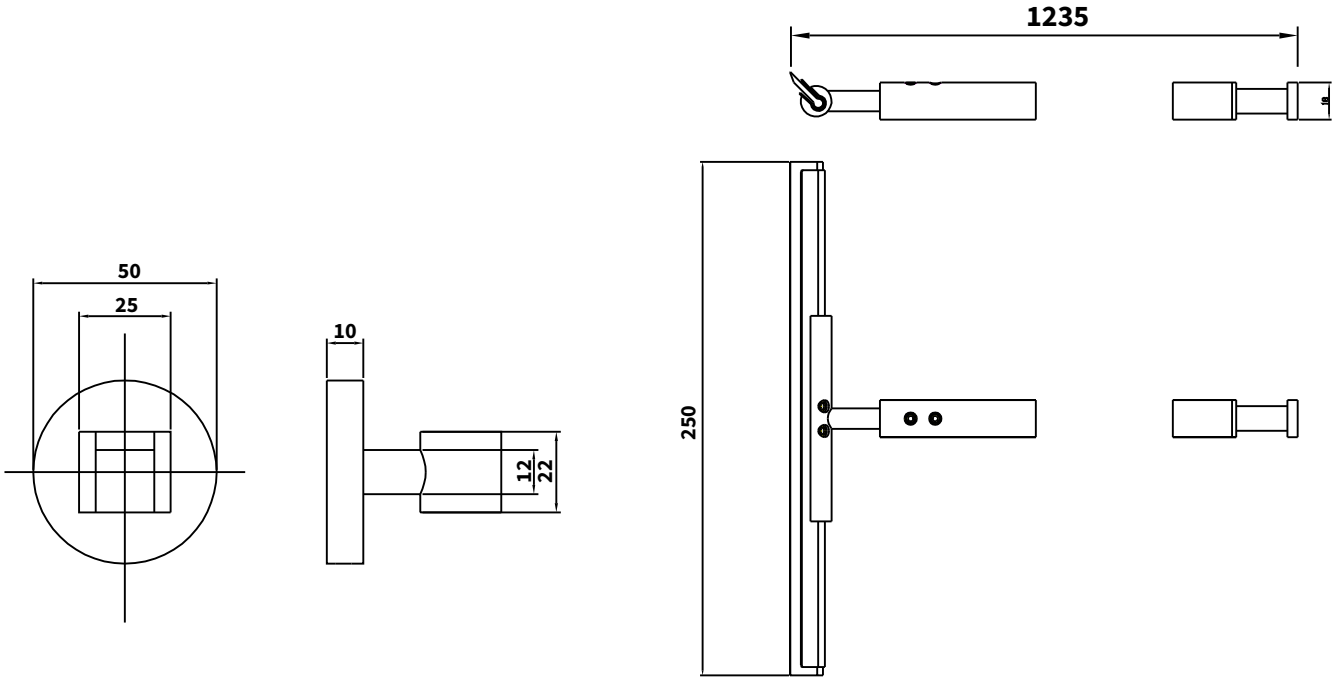


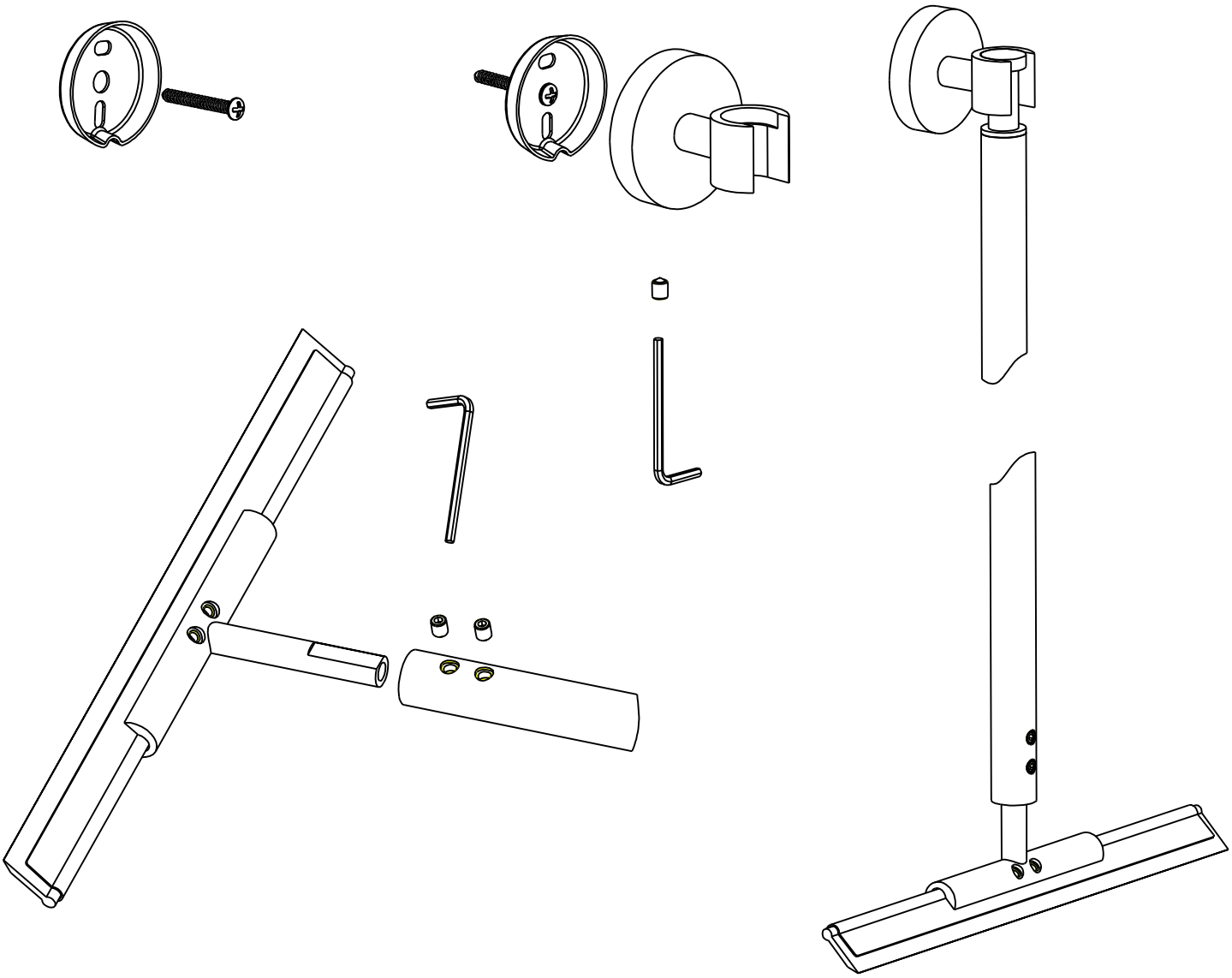

fortifura