DESIGN + ENGINEERING
GROHE GERMANY

97.0055.031/ECN 254019/08.22

www. grohe. com

Pure Freude an Wasser

GROHE

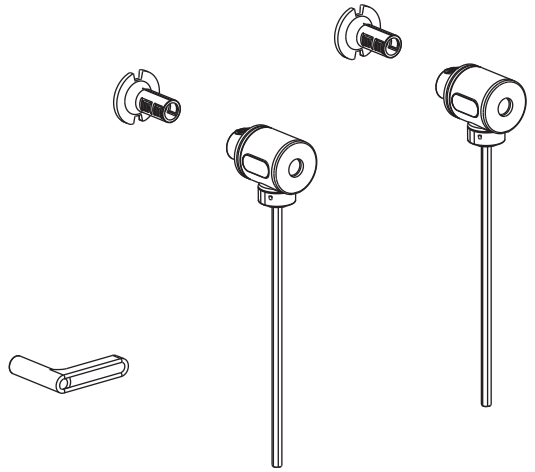

1

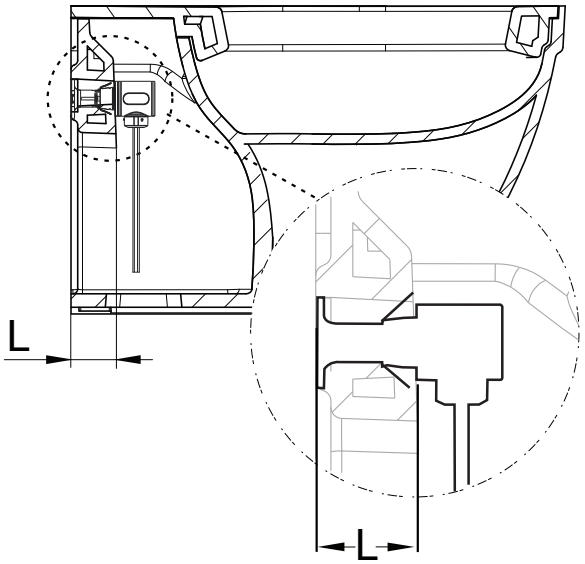

2

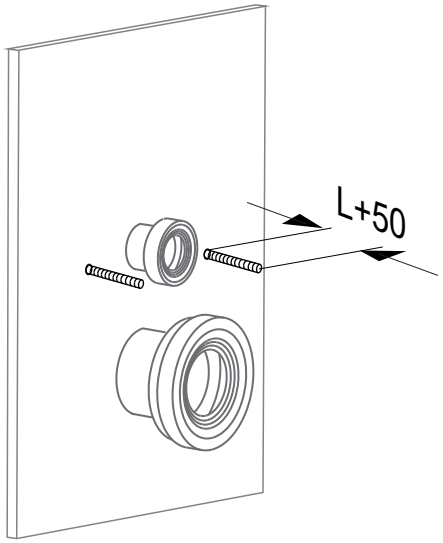

3

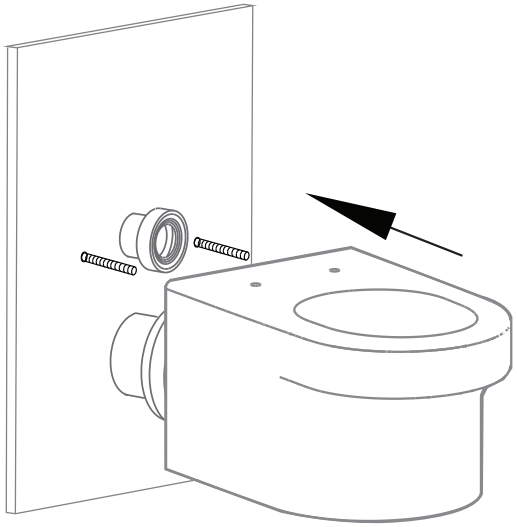

4

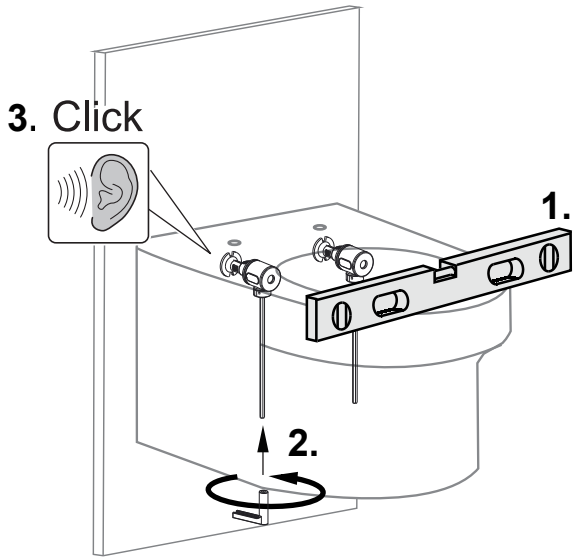

5

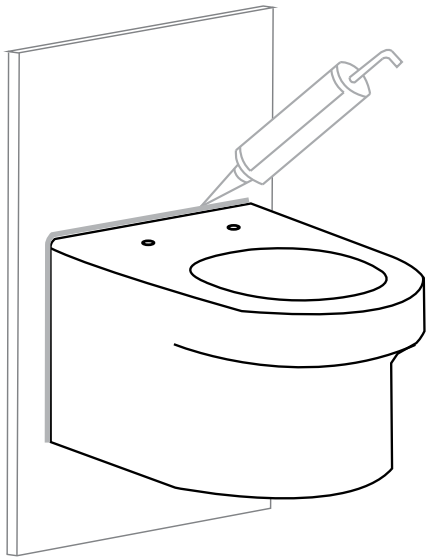

6