ideavit®

The Concrete Collection

290335 IDEA.WALL
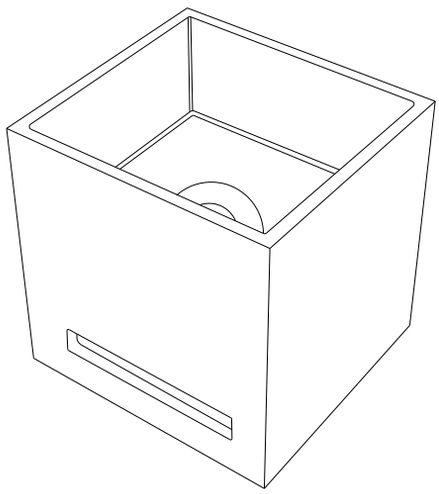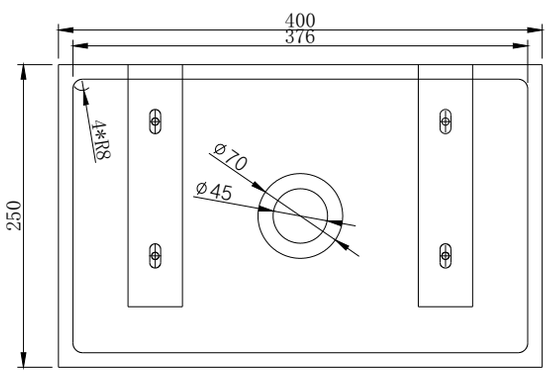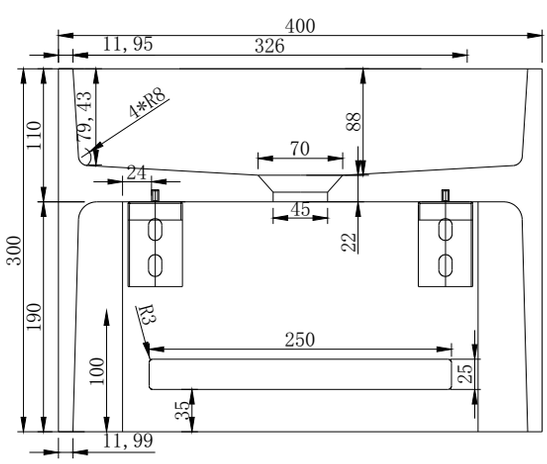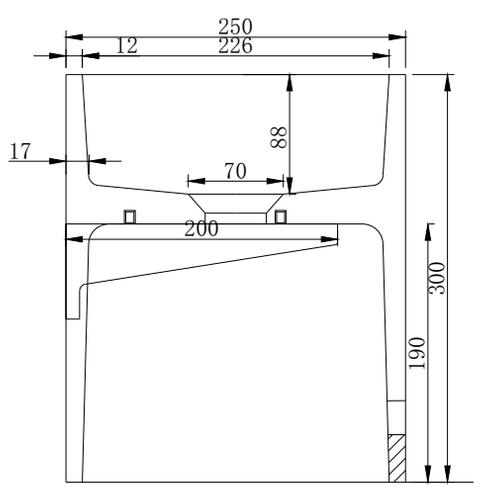
L400xW250xH300mm
Color B1-D5