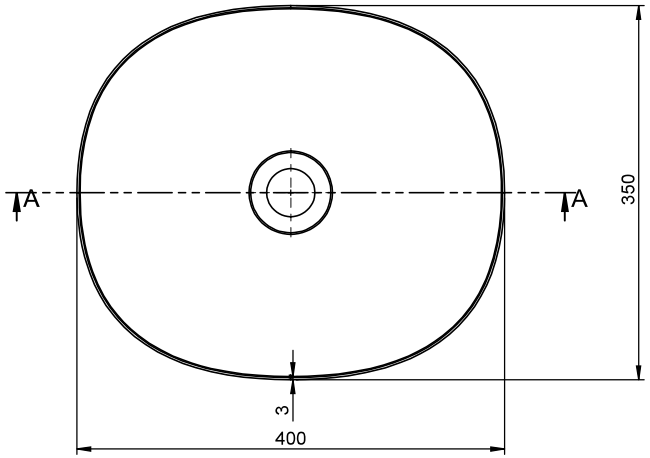

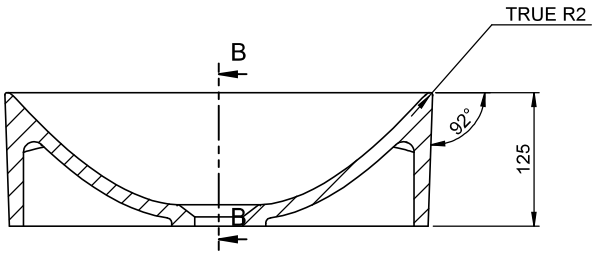

SECTION A-A

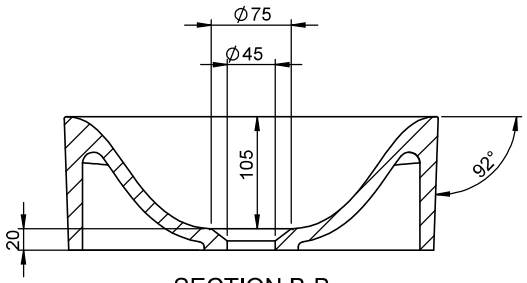

SECTION B-B

SCALE:1:5

PROJECT TITLE : 290251- SOLIDCLIFF 400	DIMENSIONS(MM) : 400 X 350 X 125	DATE : 15 FEBRUARY 2019	R1