SDS5

V11-01

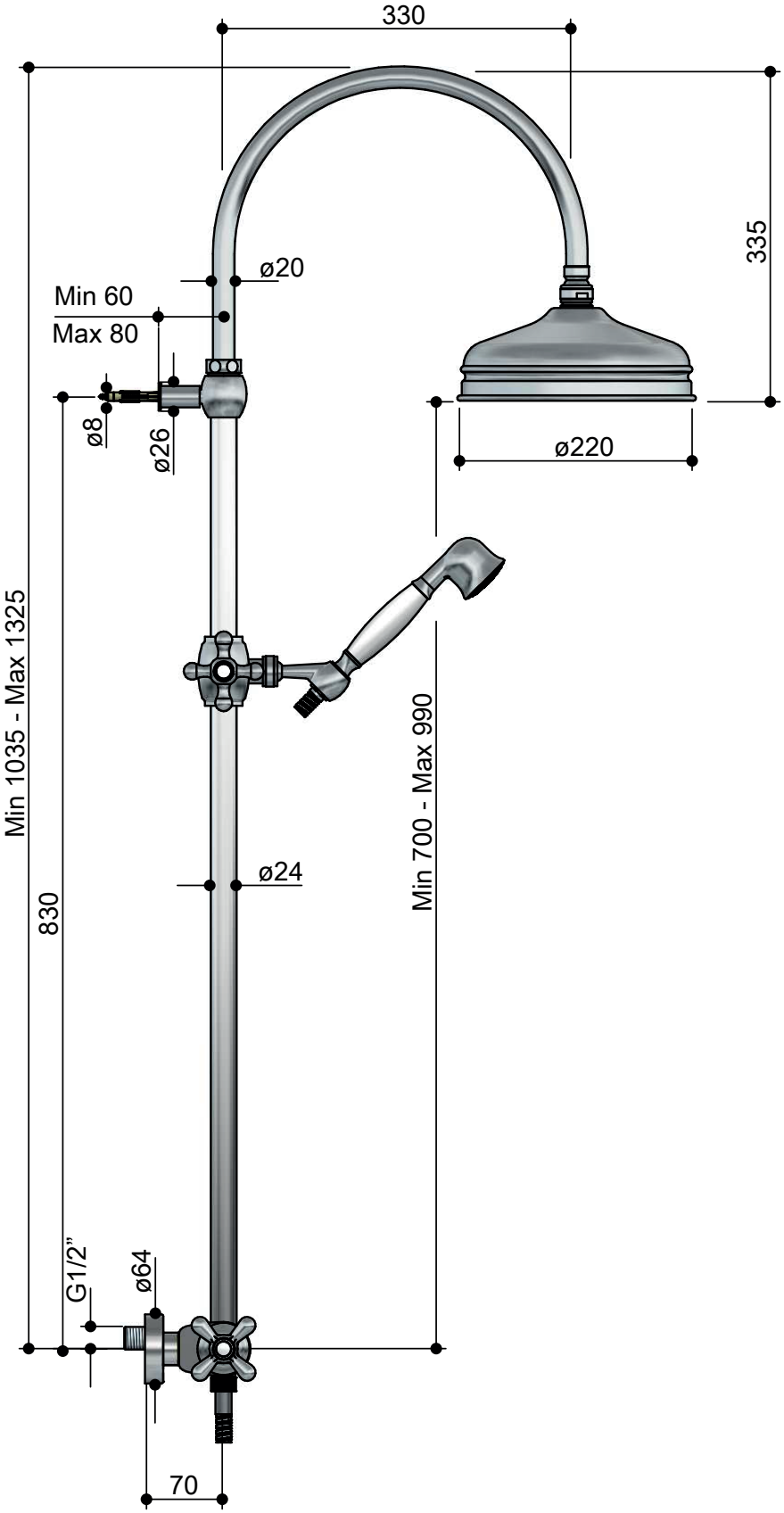

hotbath
italian bathroomware