COR – WASHBASIN / INTEGRATED TABLET – 120X46 SKU 933821

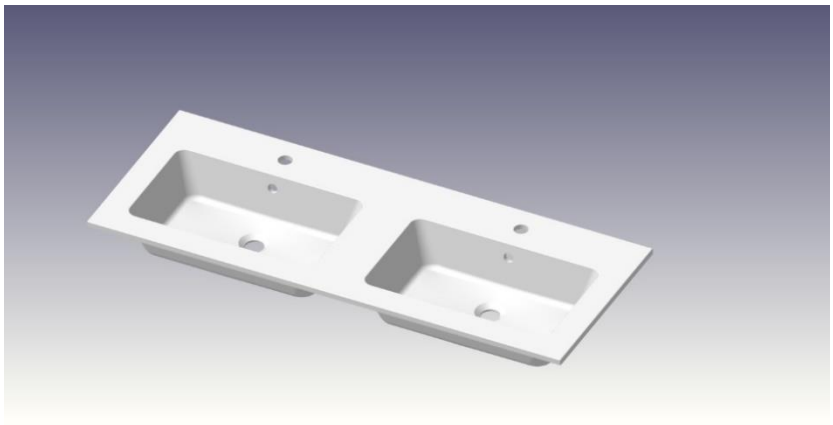

ABMESSUNGEN:

Länge:	**805 mm**
Tiefe:	**460 mm**
Höhe:	**14 mm**

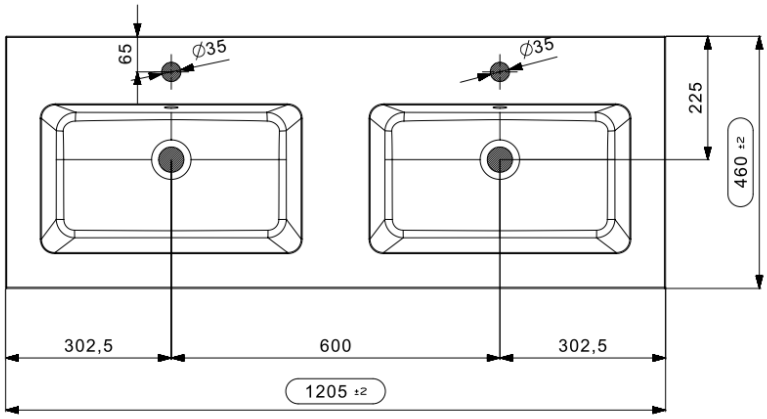

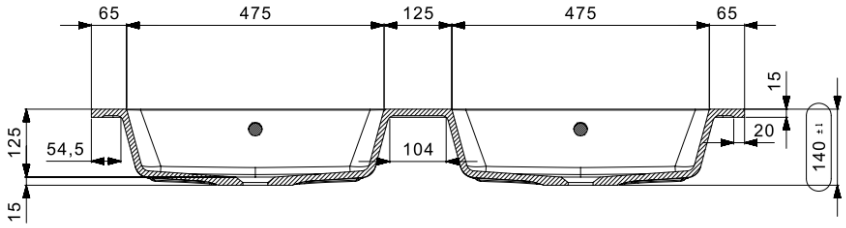

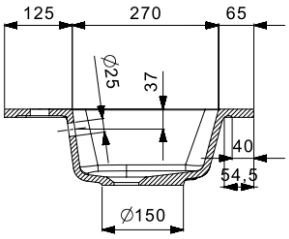

Washbasin	Tablet – 2 Washbasins
Material	Artificial marble
Color	Mat white
Mounting	Tablet
With tap hole	Yes
With overflow	Yes

The dimensions, as well as the assortment can be modified without prior notice.