ARA10
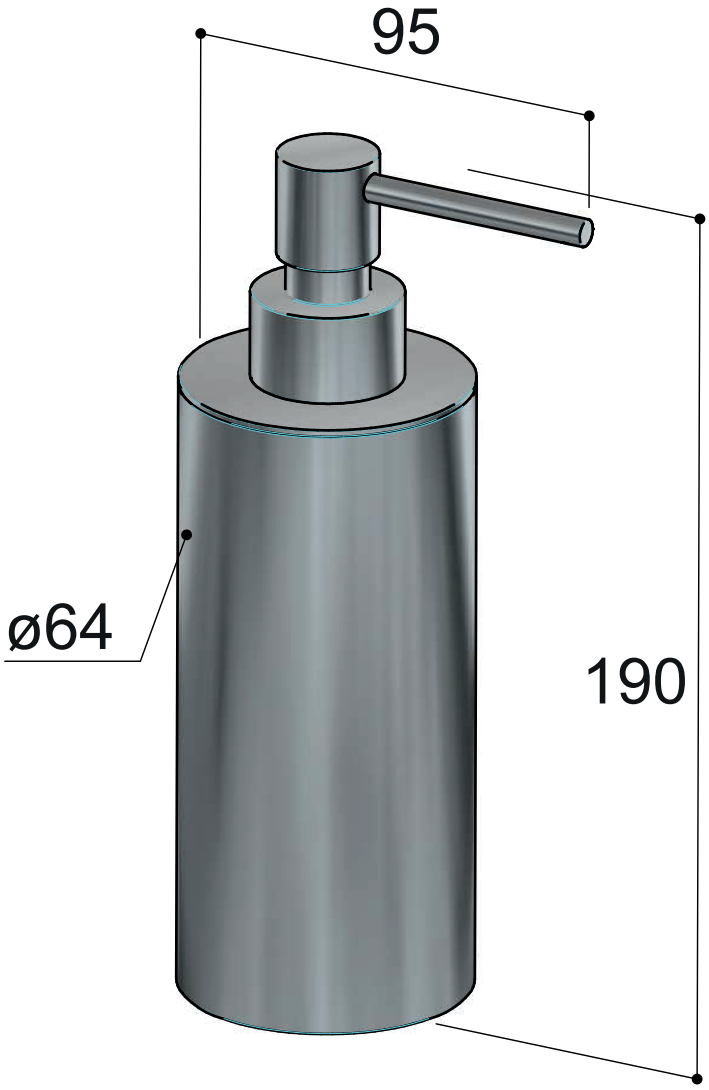
V11-01