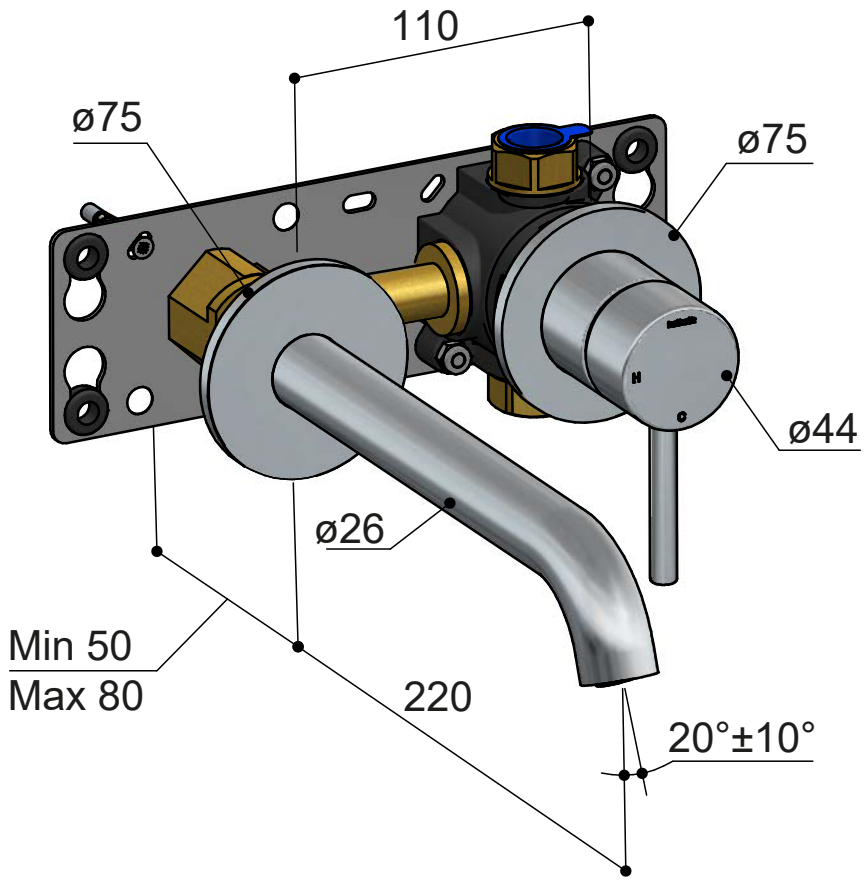

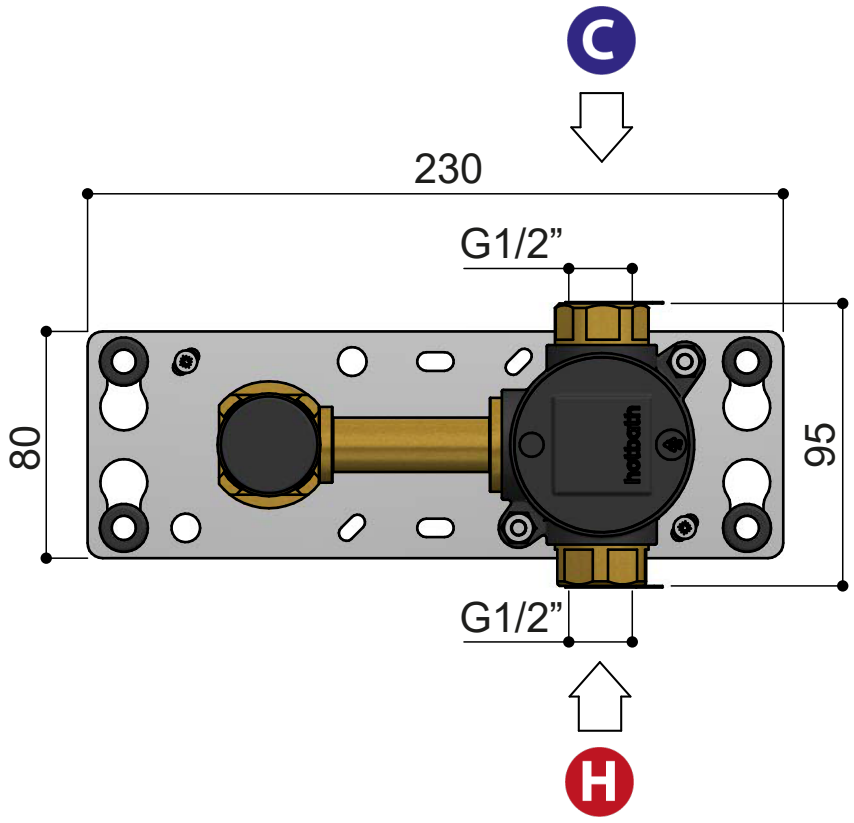

HBCB105

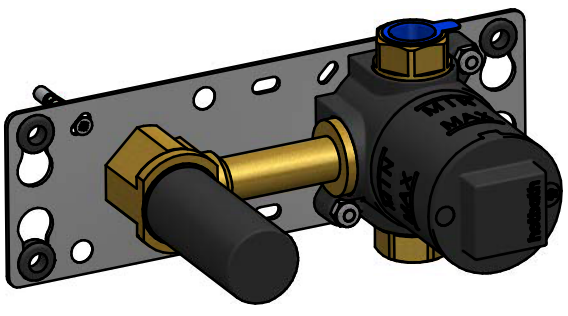

B105EXT22...