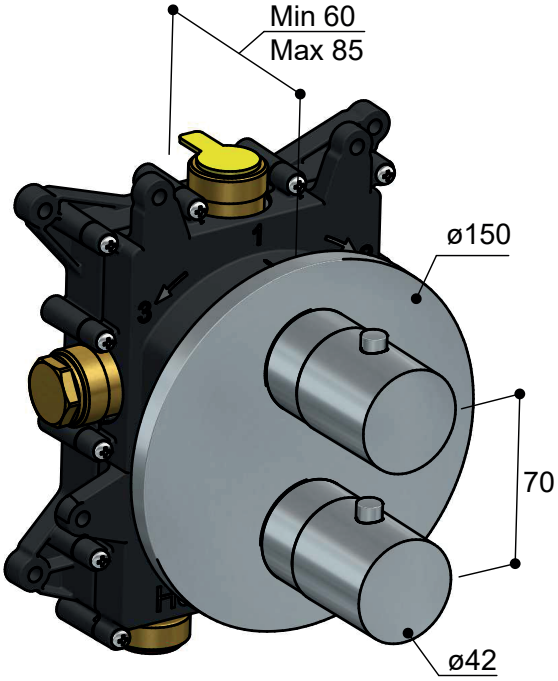
Min 60
Max 85
ø150
70
ø42

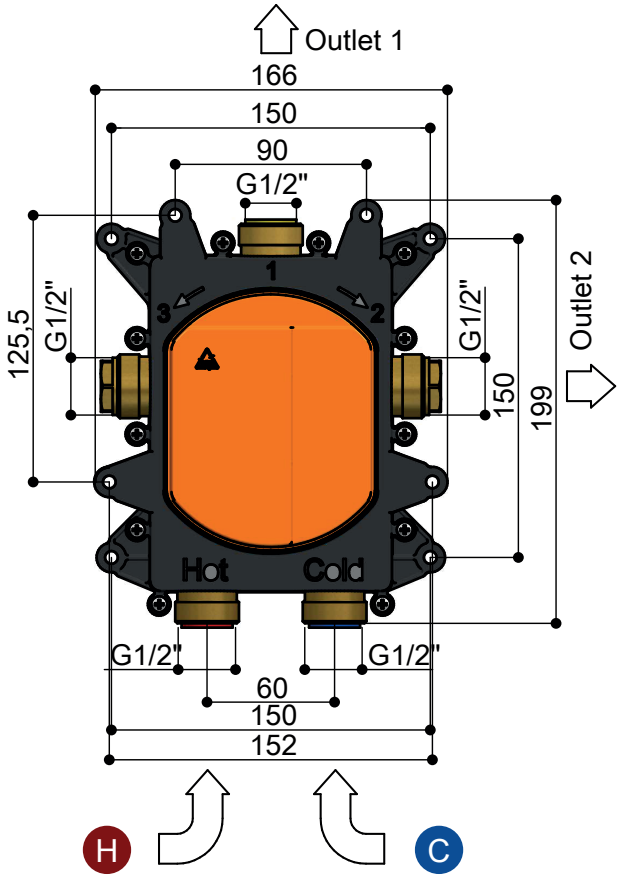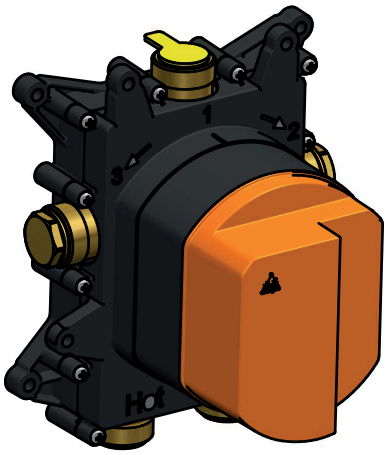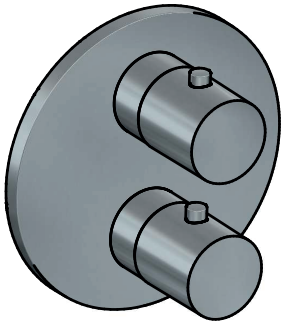
Outlet 1
166
150
90
G1/2"
125,5
G1/2"
G1/2"
150
199
Outlet 2
Hot
Cold
G1/2"
G1/2"
60
150
152
H
C