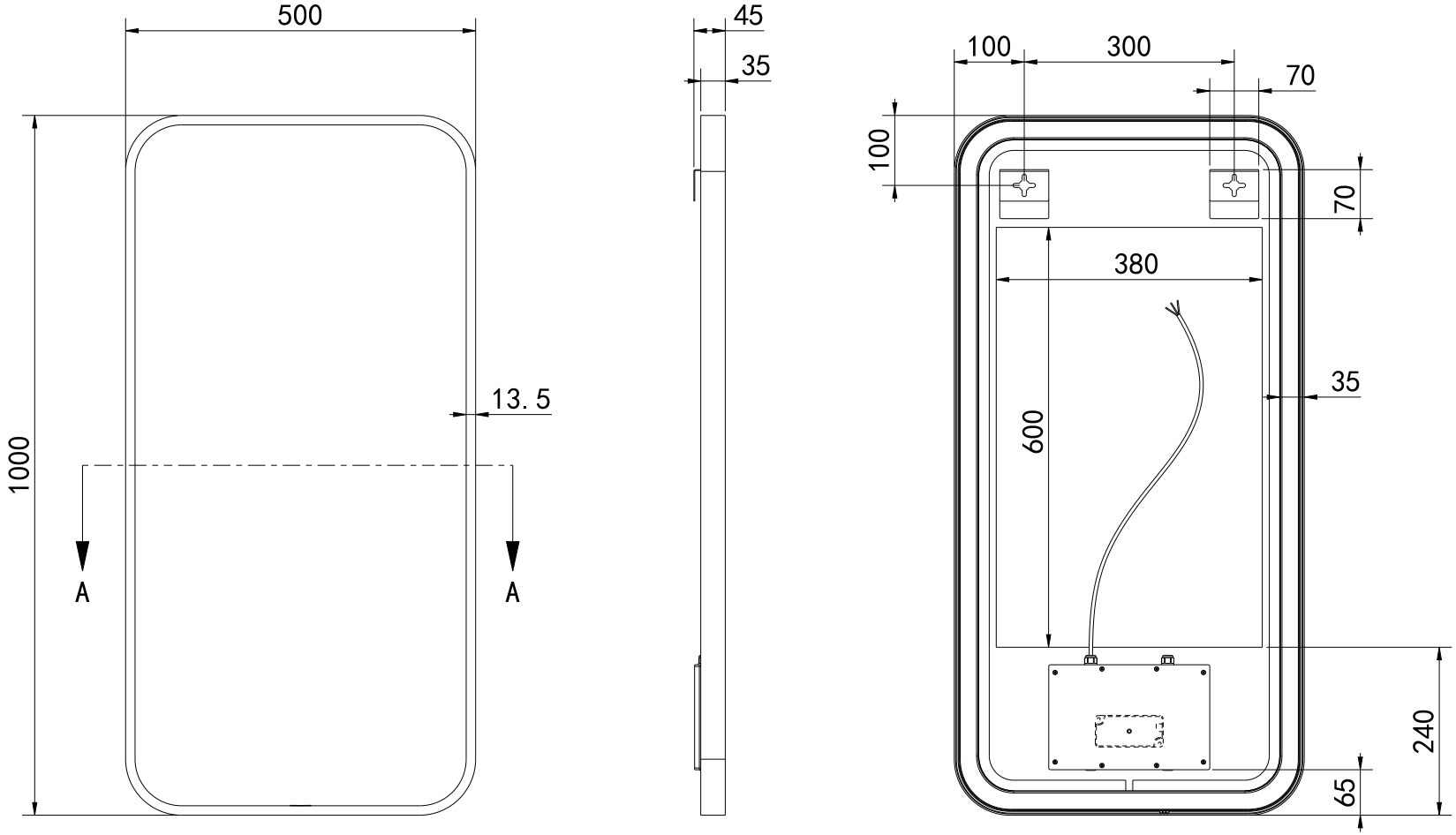

hotbath Italian bathroomware	Spiegel in aluminium frame / Soft Square incl direct & indirect LED, spiegelverwarming, color changing, dimbaar, dottless, met afstandsbediening	Mirror 500*1000 mm Drawing unit: mm	**SSQ510**