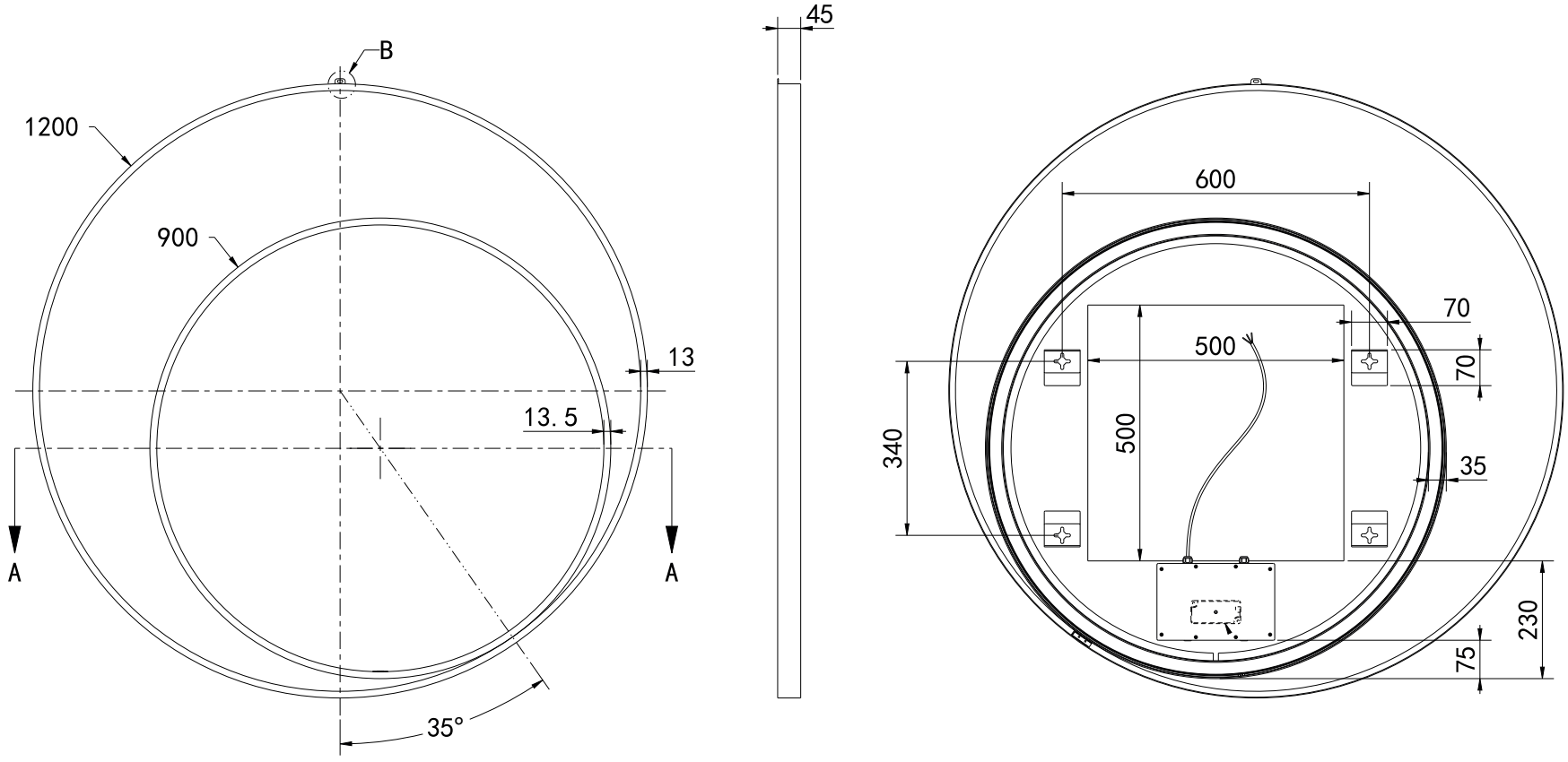

hotbath Italian bathroomware	Spiegel in aluminium frame / Round2, incl. direct & indirect LED, spiegelverwarming color changing, dimbaar, dottless, met afstandsbediening	Mirror 1000*1000 mm Drawing unit: mm	**R2X120**