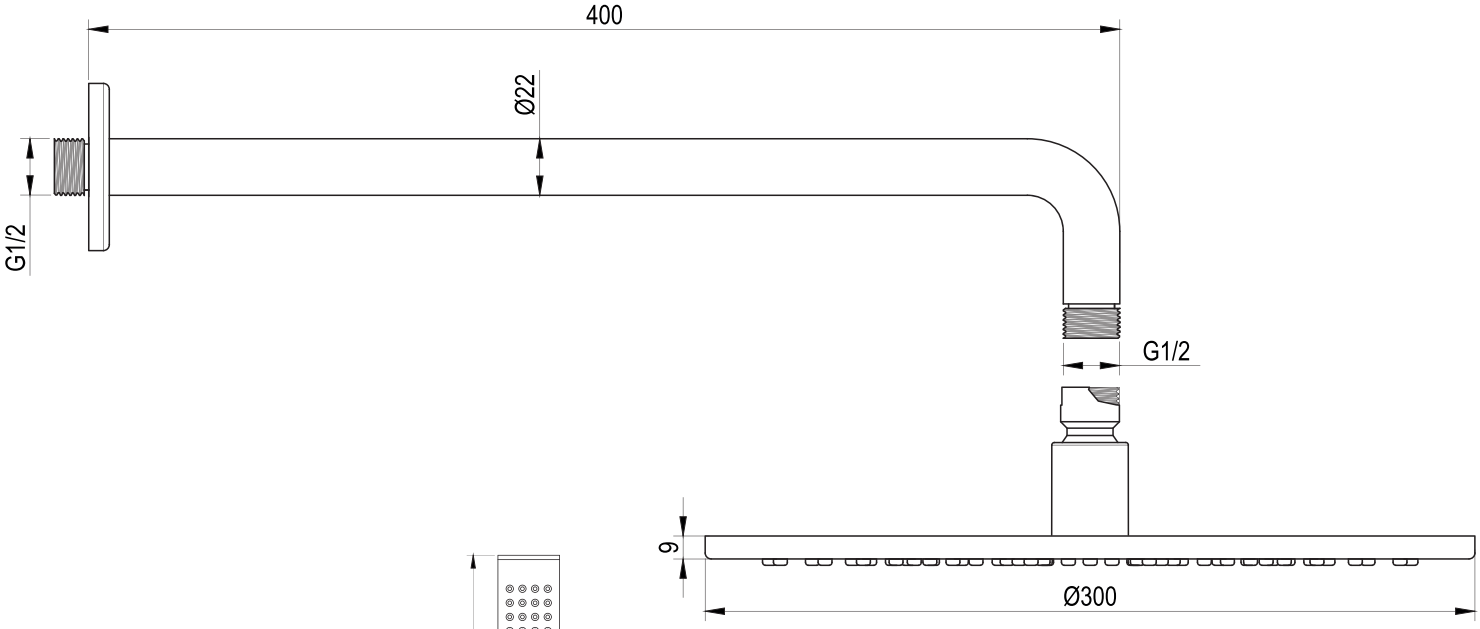
400
Ø22
G1/2
G1/2
9
Ø300

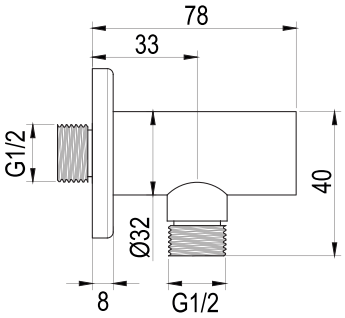
78
33
G1/2
40
Ø32
8
G1/2

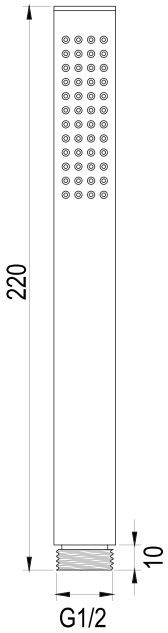
220
10
G1/2

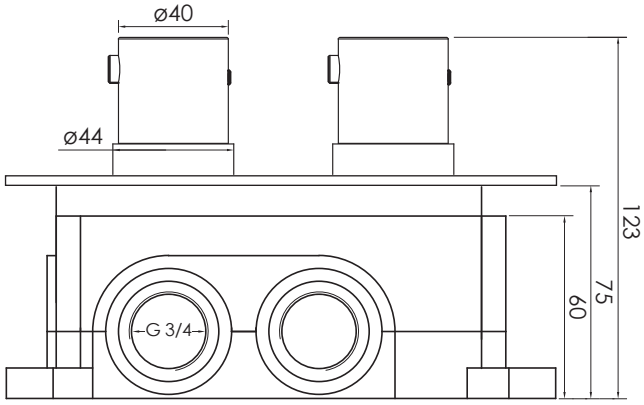
ø40
ø44
123
75
60
G 3/4

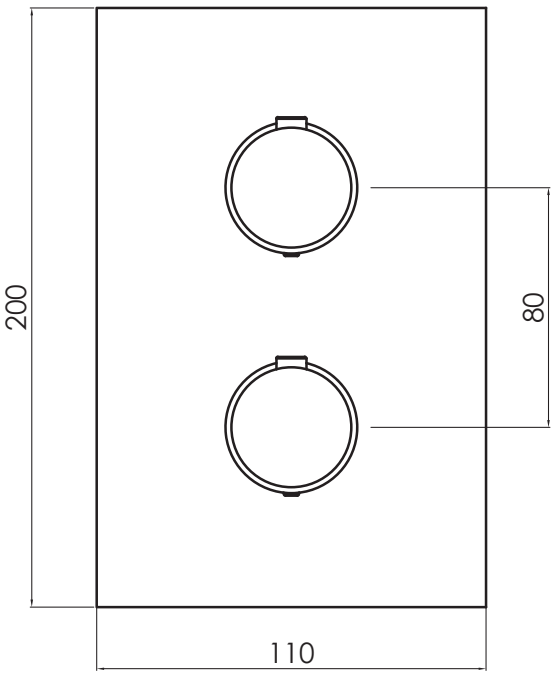
200
80
110