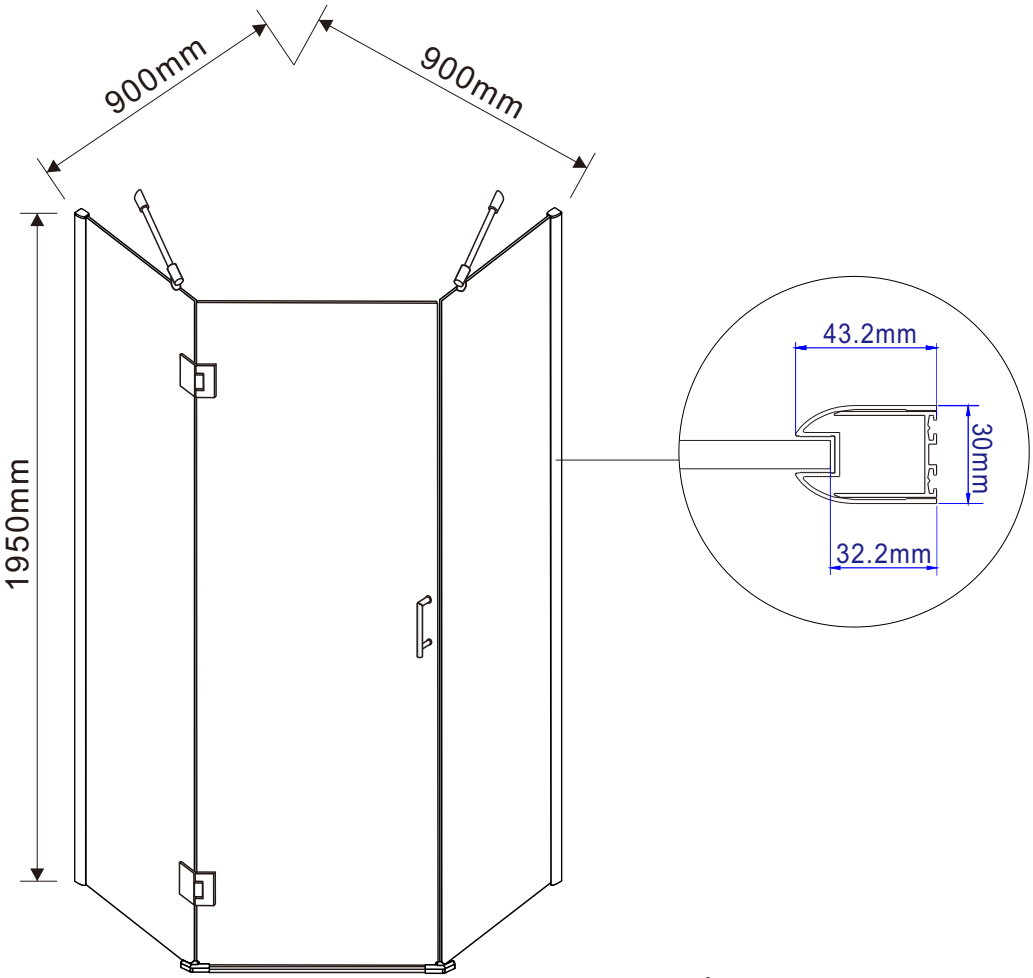

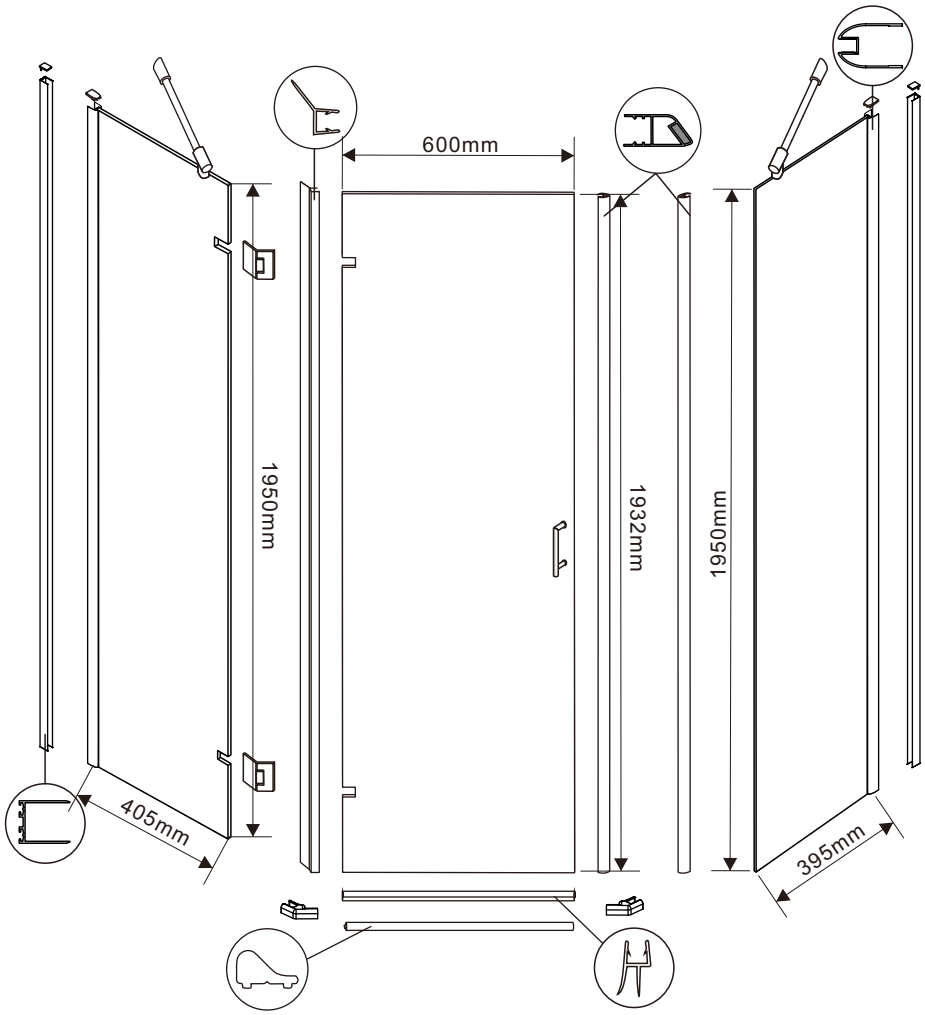

Product Code:SW1250
Product Size:900x900x1950mm