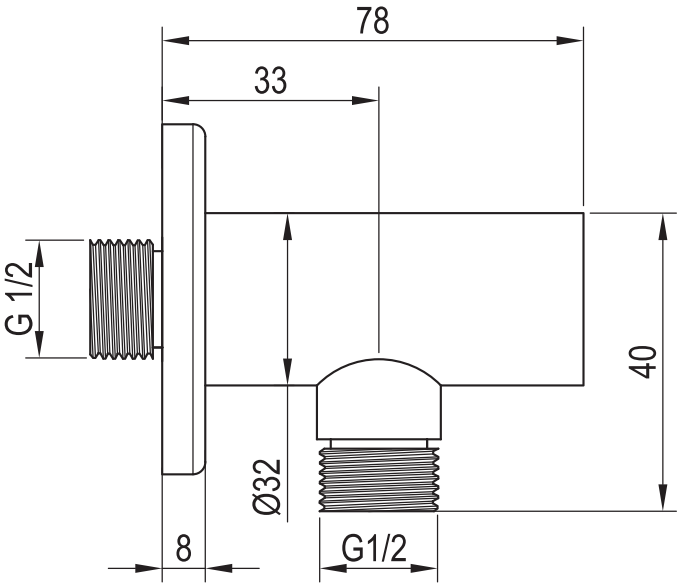
78
33
G 1/2
40
Ø32
8
G1/2

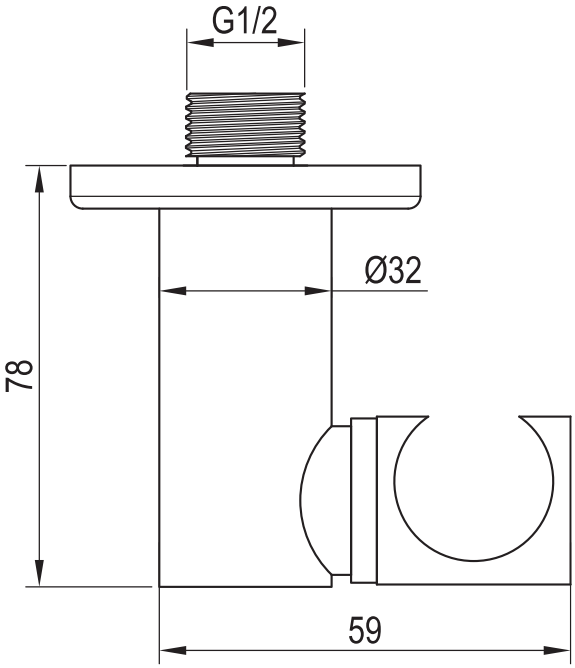
G1/2
Ø32
78
59

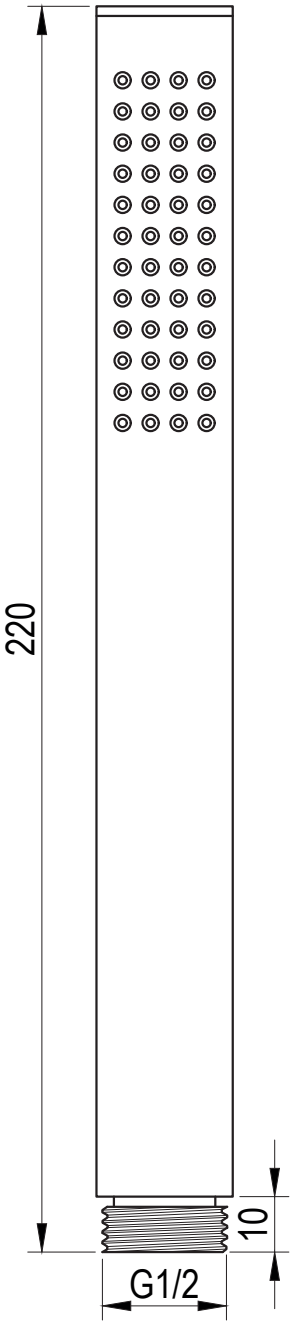
220
10
G1/2

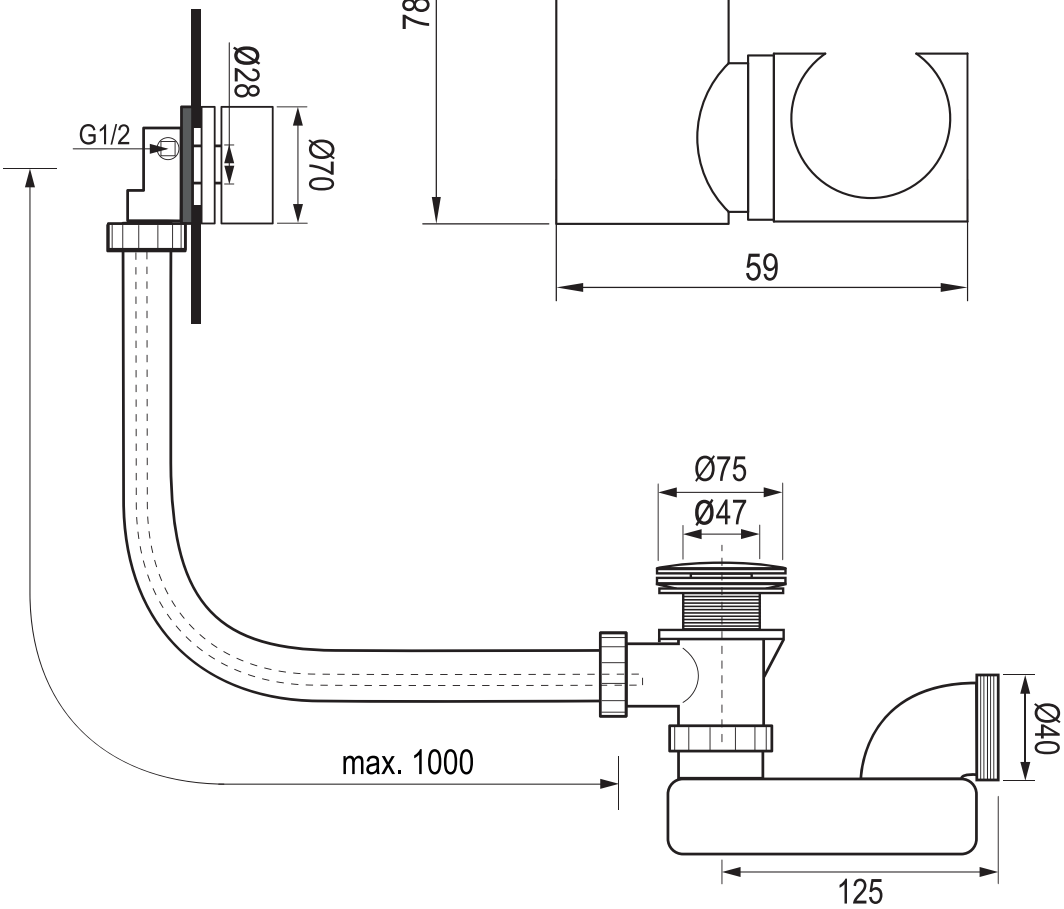
Ø28
G1/2
Ø70
Ø75
Ø47
Ø40
max. 1000
125

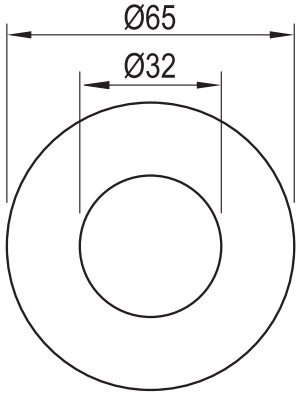

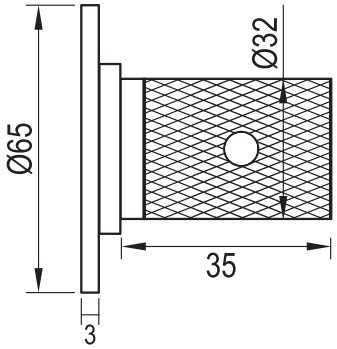

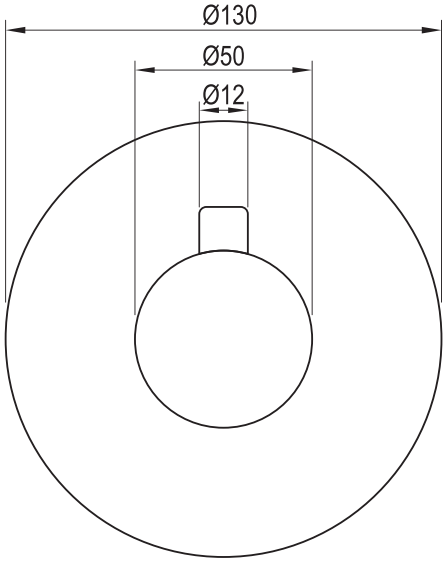

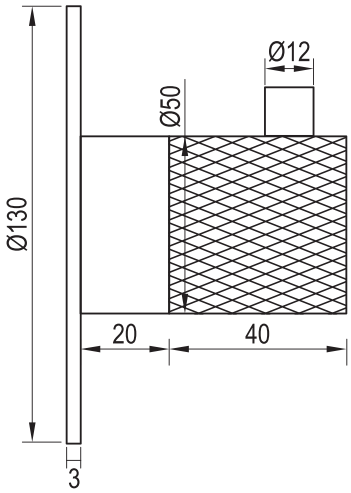

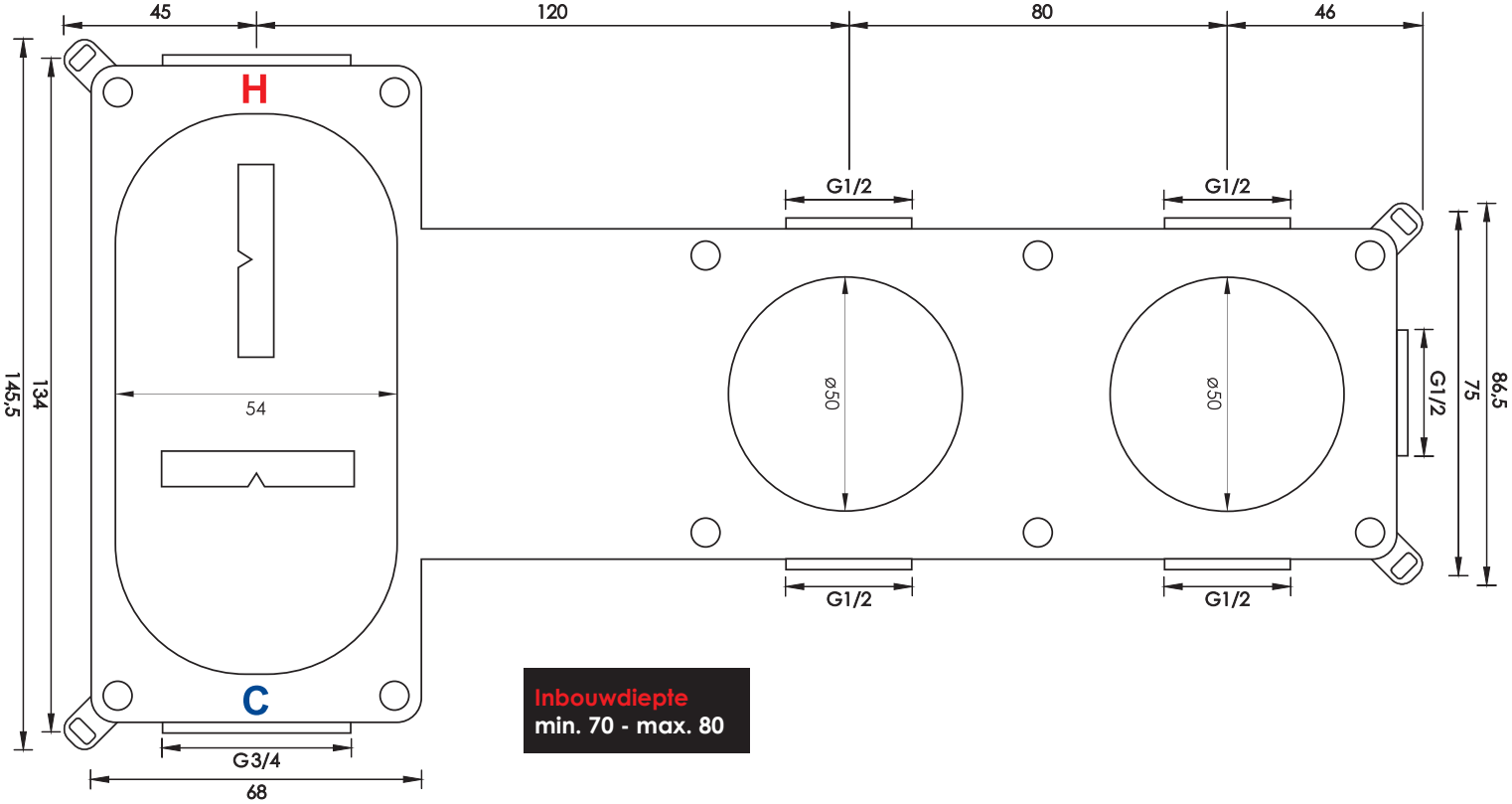

Inbouwdiepte
min. 70 - max. 80