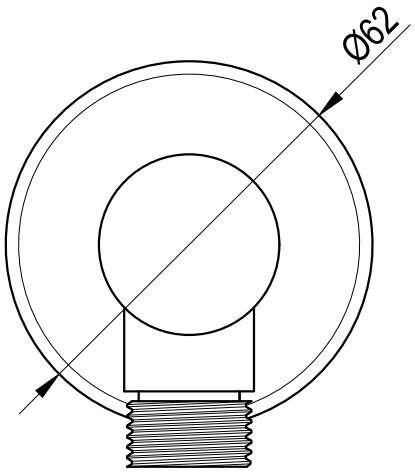
Ø62

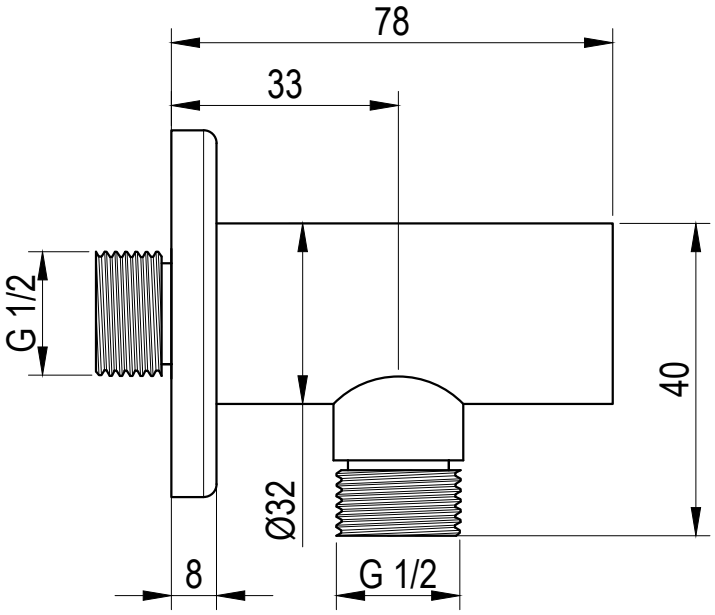
78
33
G 1/2
40
Ø32
8
G 1/2

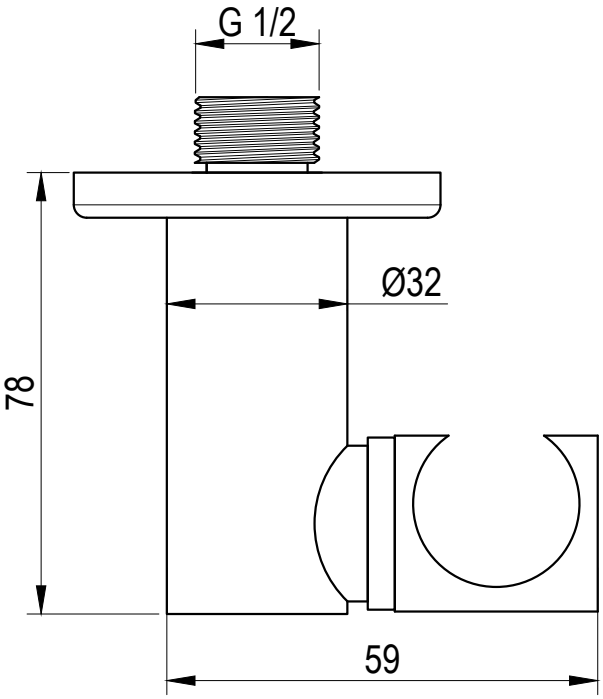
G 1/2
Ø32
78
59