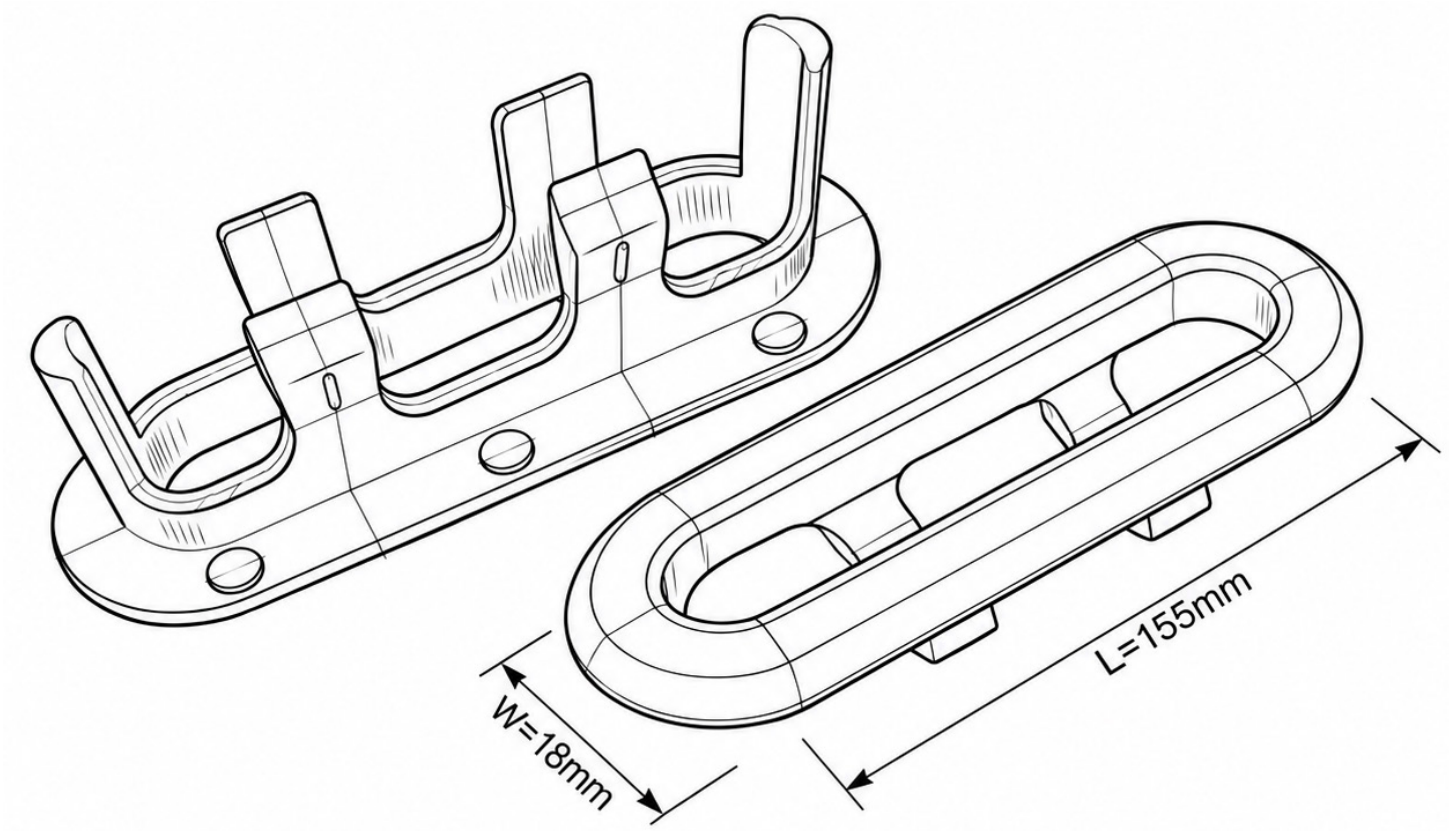

SANICLASS