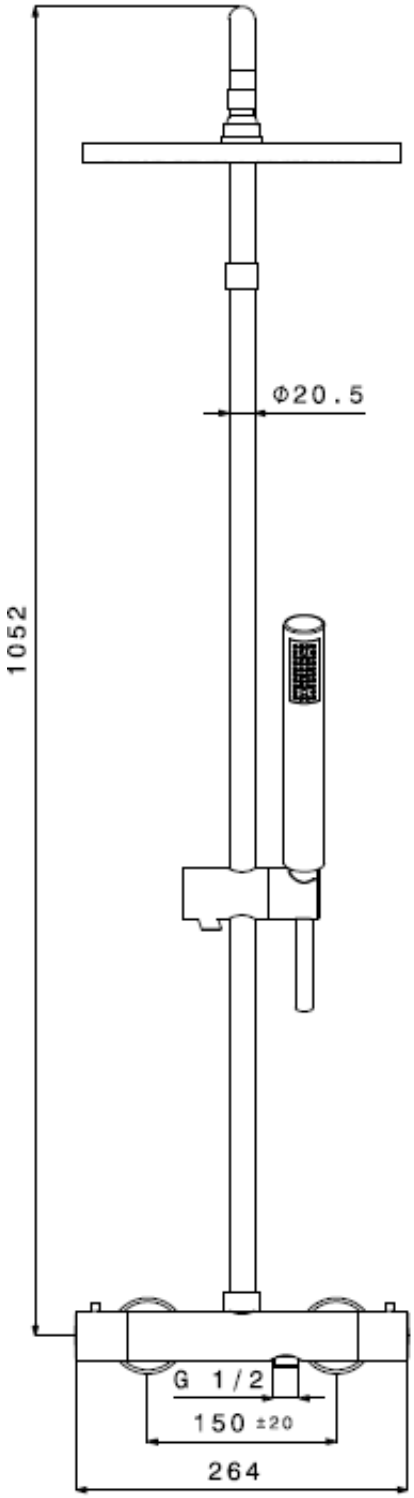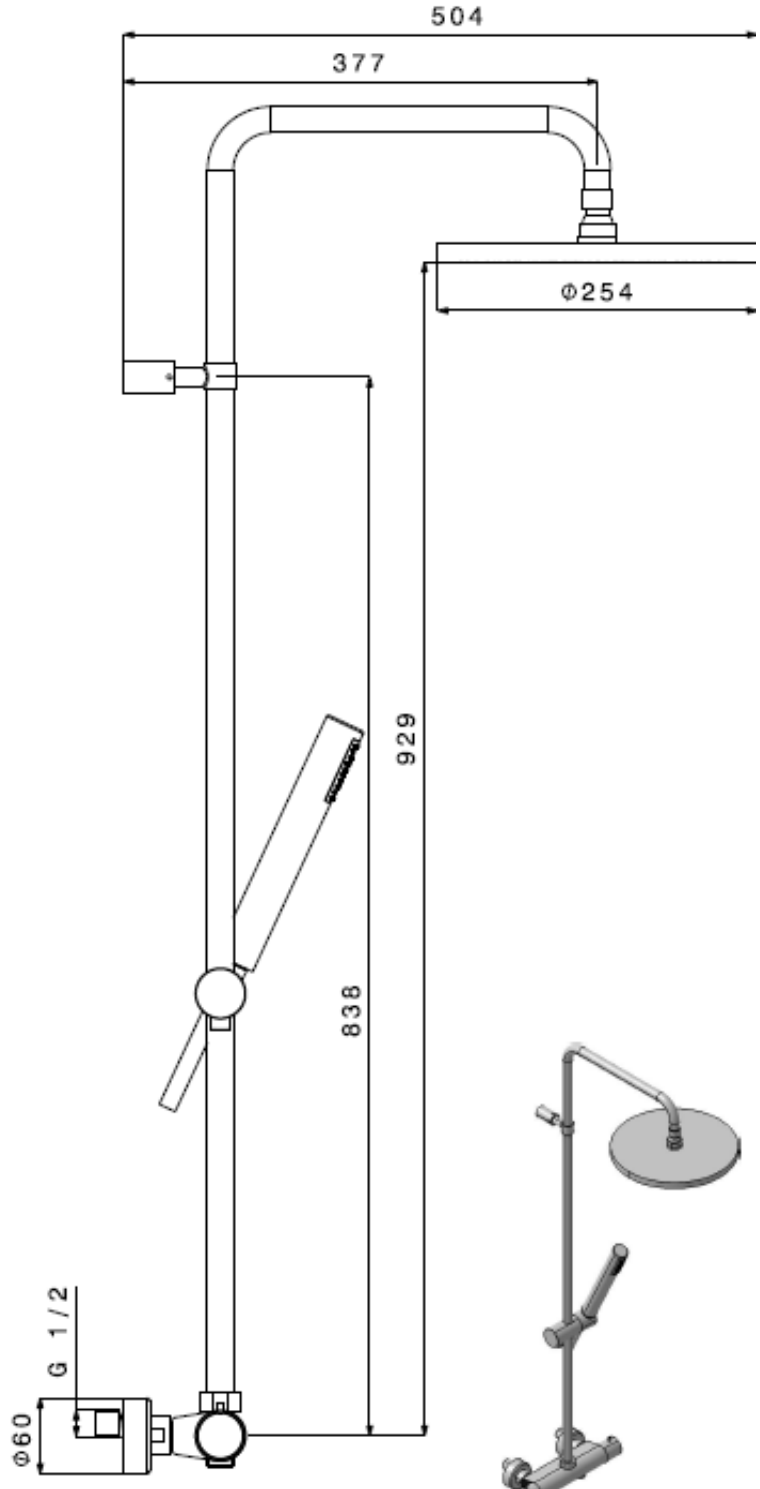4352020 Royal