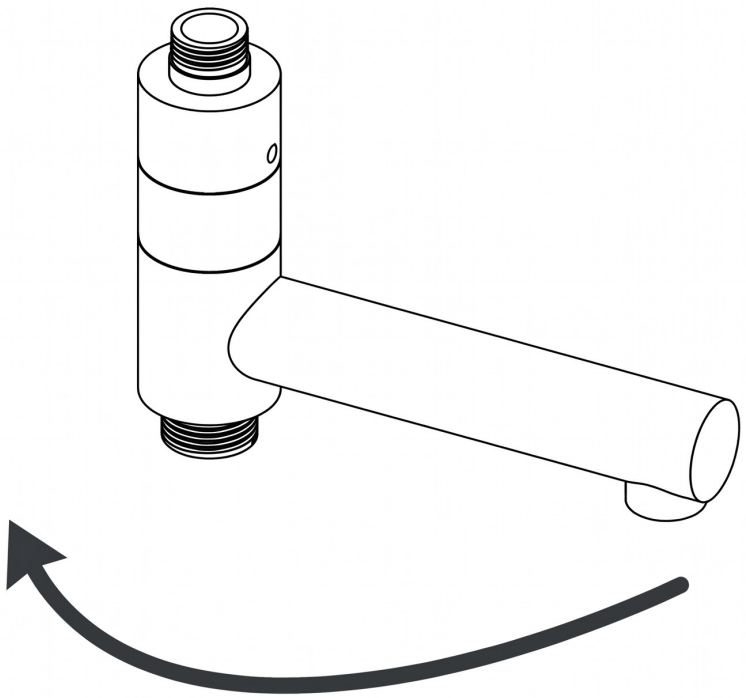

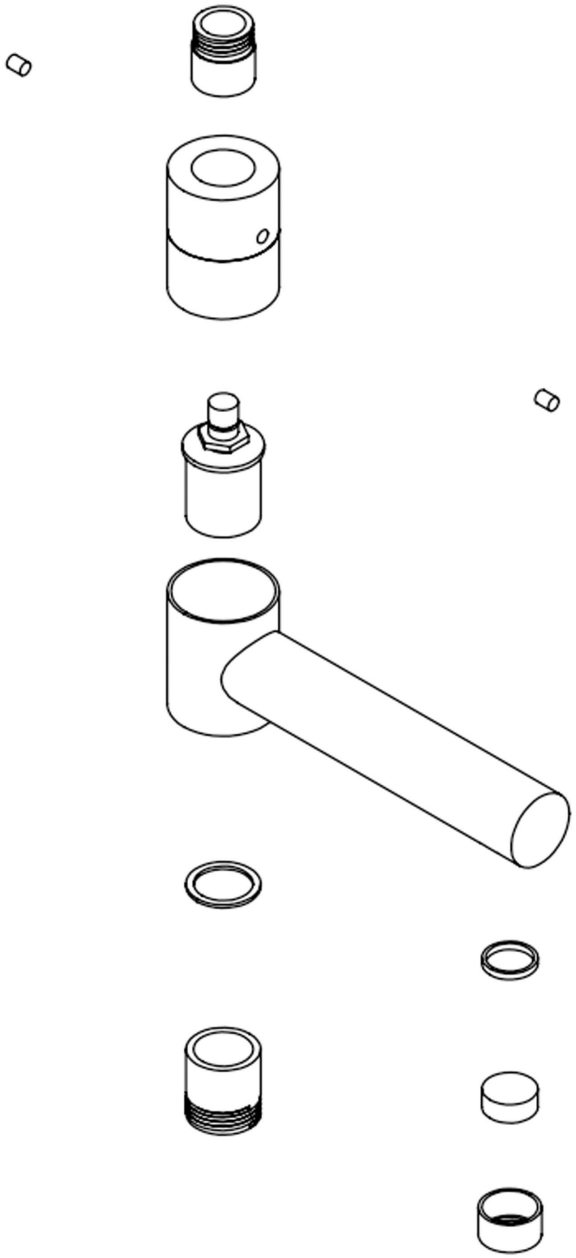

fortifura