IBS2RA
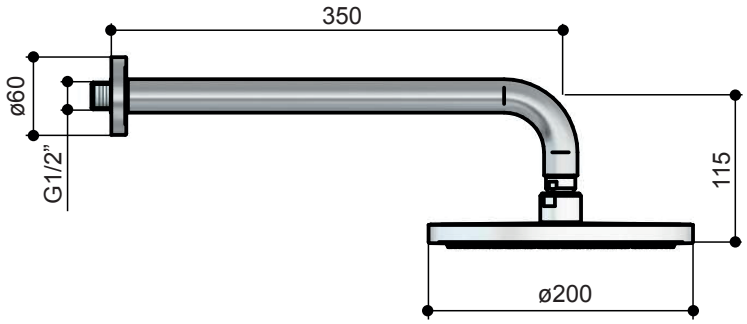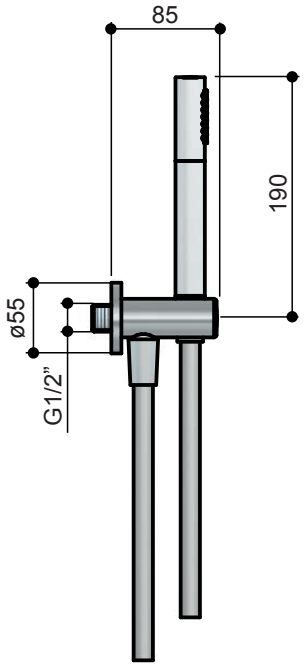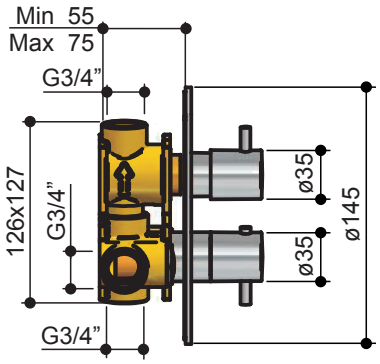
V11-01