SKU 049112

Installatie Handleiding
Installation Manuel
Installation Manual
Close Coupled WC-P

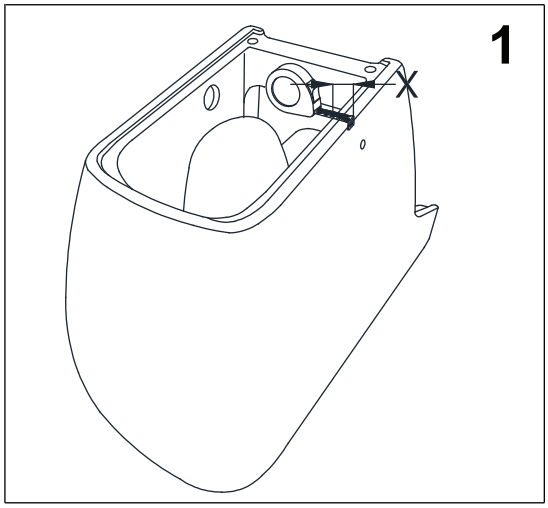

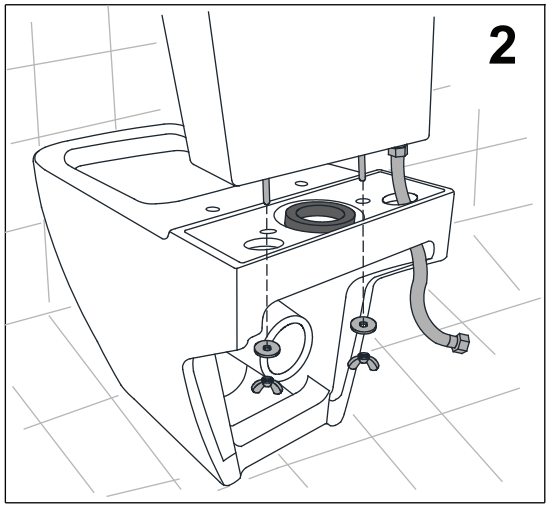

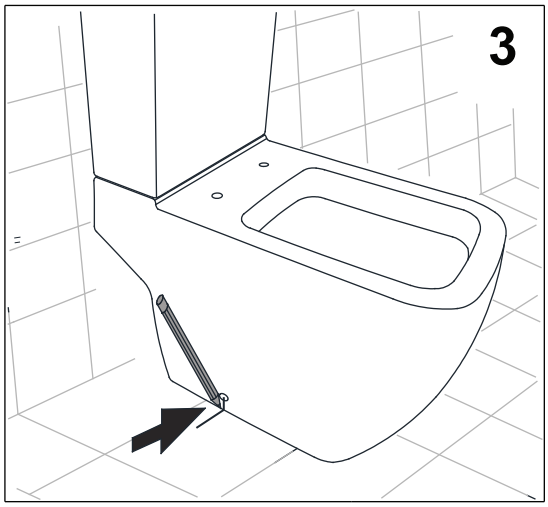

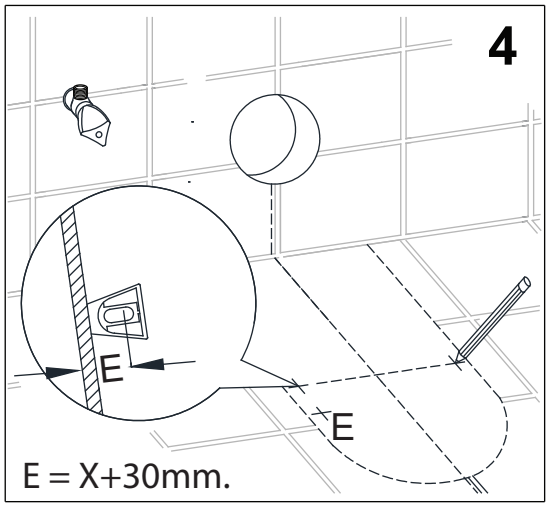

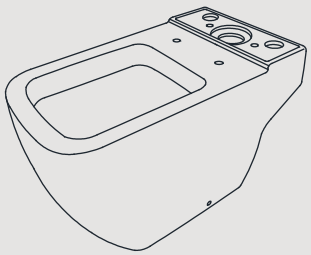

[x 1]

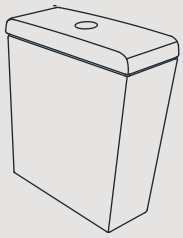

[x 1]

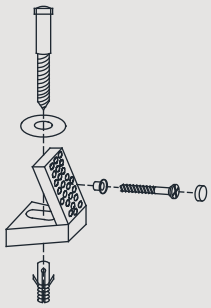

[x 2]

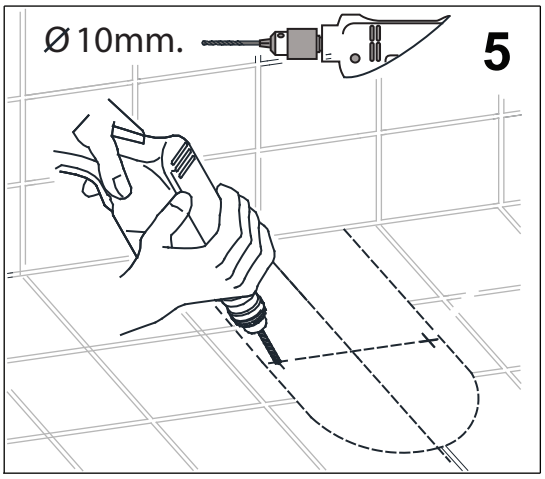
Ø10mm.
5

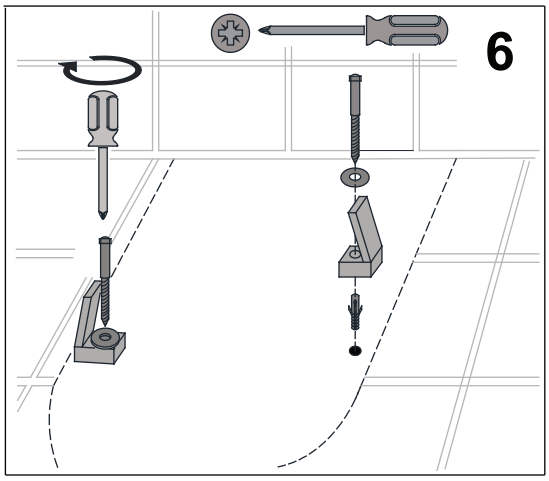
6

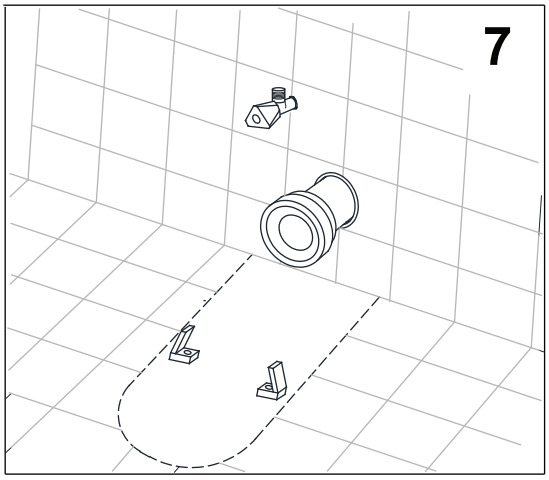
7

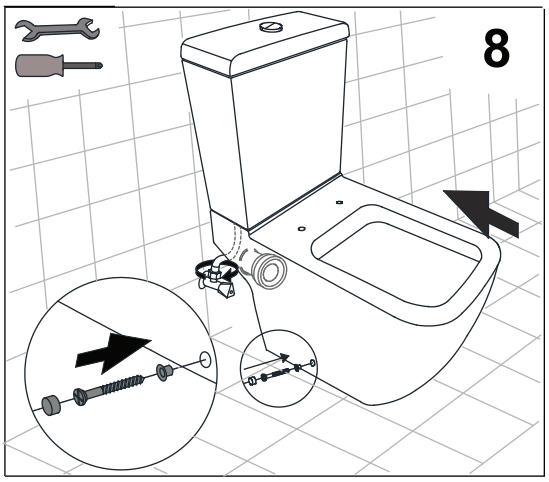
8

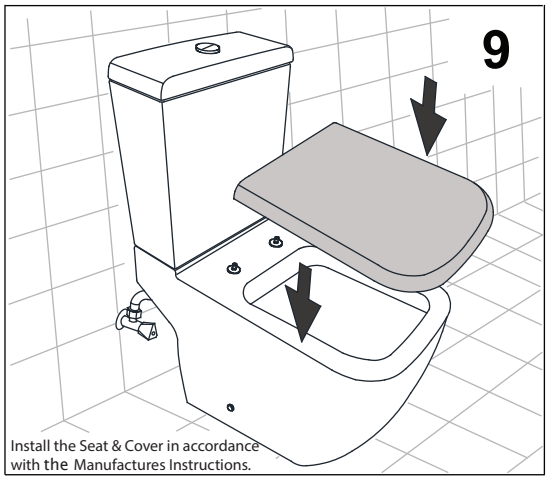
9
Install the Seat & Cover in accordance
with the Manufactures Instructions.

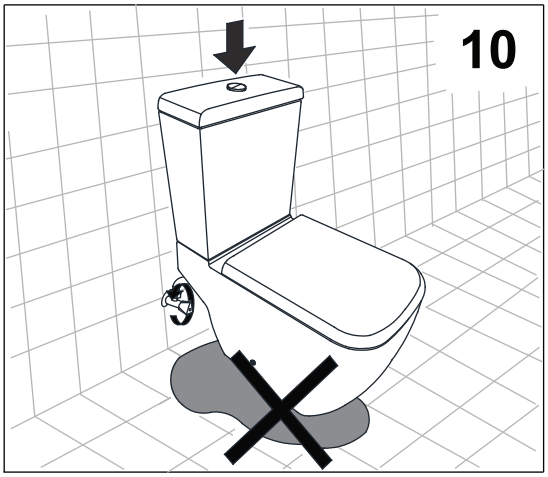
10

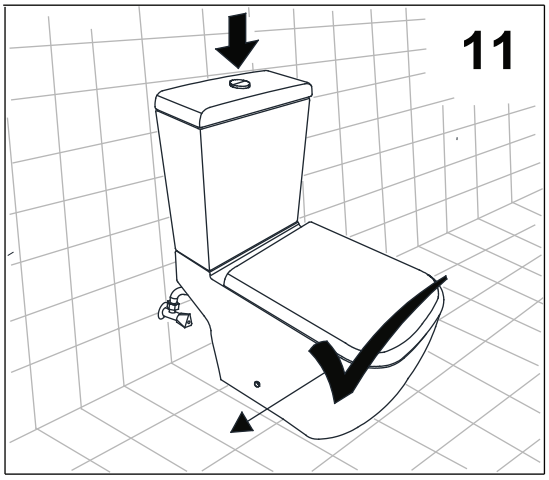
11

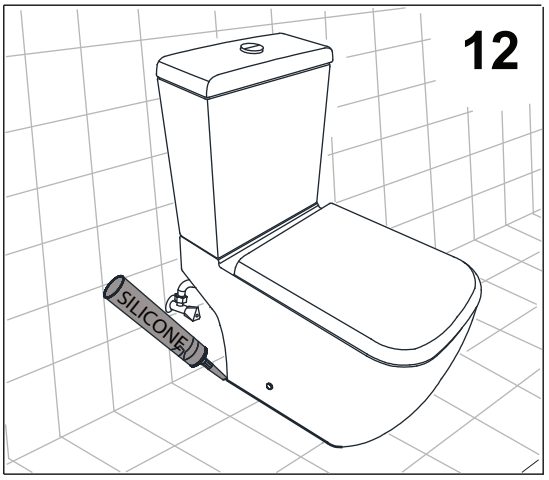
12
SILICONE

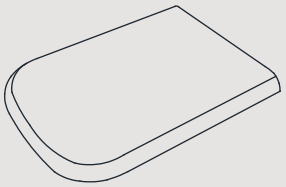

[x 1]

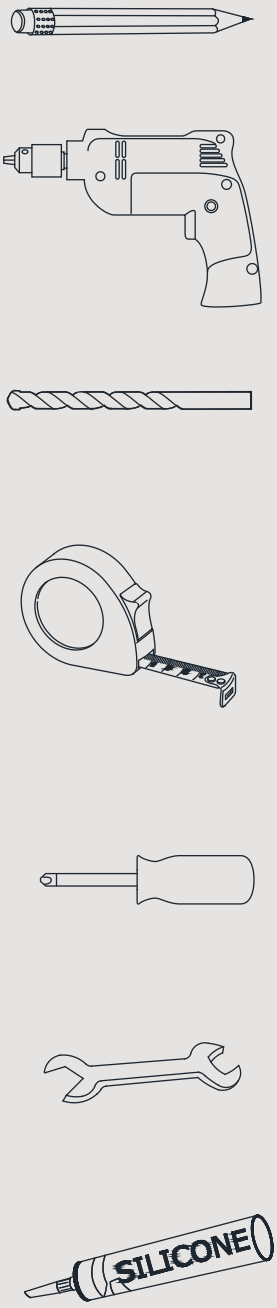
SILICONE