Rev	Design Change Note	Author	Date
002	Total size changed according to 3D model	KW	2026-09-09
003	Top radius changed	KW	2026-09-18
004	Approved	KW	2026-09-30

A-A (1 : 2)

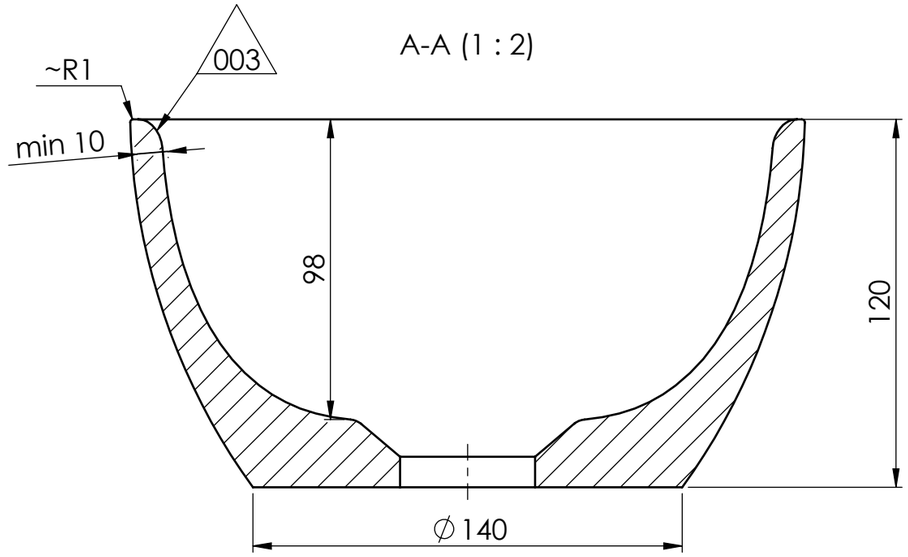

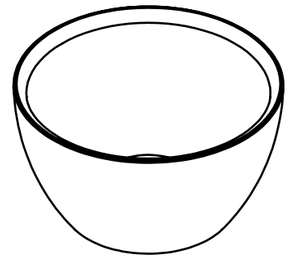

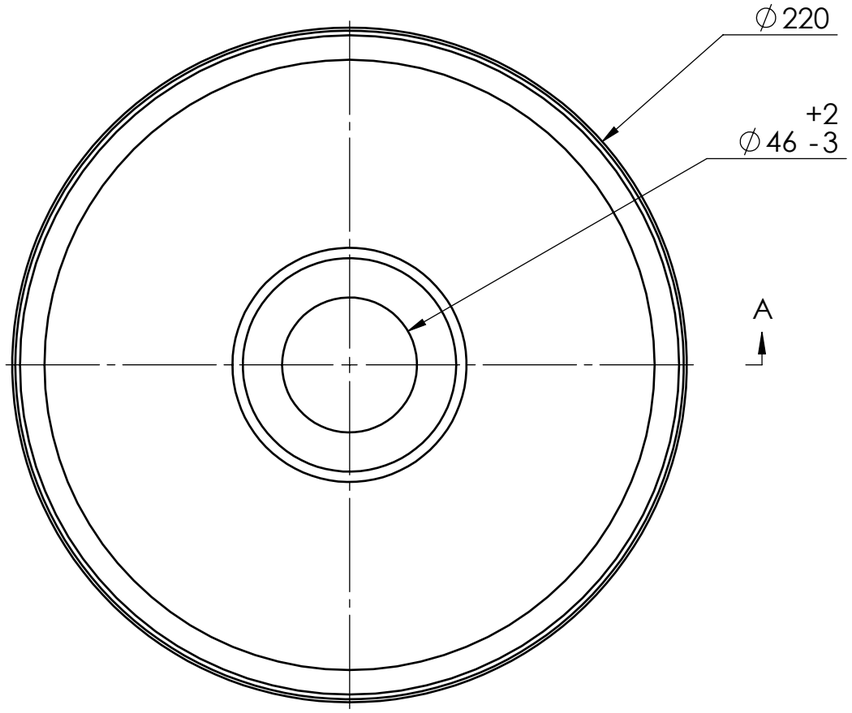

Bottom view/
Widok z dołu

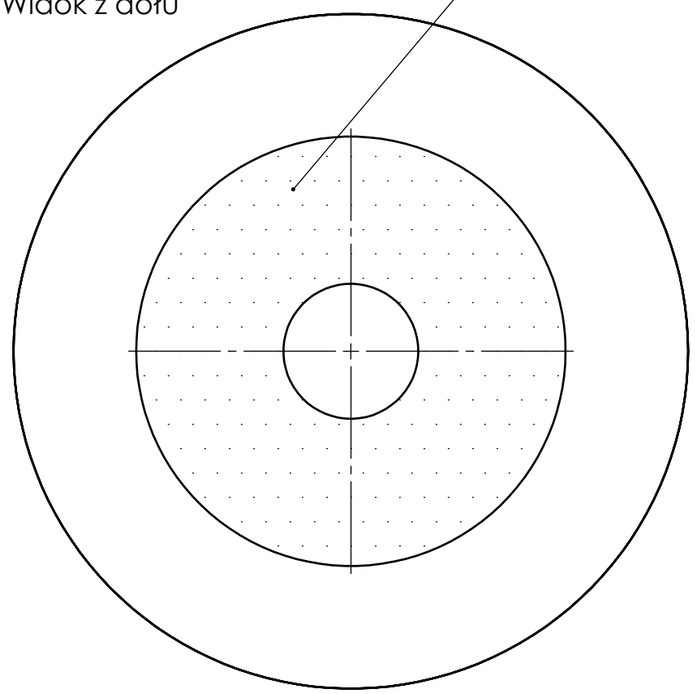

Tolerance total	length	+3/0 mm
	width	+2/0 mm
	height	+2/-2 mm
Tol. height side walls	≤25 mm	+1/-1 mm
	>25 mm	+2/-2 mm
Tolerance holes location		+2/-2 mm
Tolerance holes diameter		+1/-1 mm
Tolerance plane bending	≤1200 mm	+1,5/-1,5 mm
	1200<x≤1500 mm	+2/-2 mm
	>1500 mm	+2,5/-2,5 mm

Drawn by: Wesoły K	Checked by: Bączyk R	Design by:
Created Date: 2026-09-03	Client: ARCQUA	

MARmite

Art. Name: WB OLIVIA 220C
Art. No: 6655100210xx
Tool No: K5510021
Customer ID: 4998
SF No: 2026-1850

Material volume[mm³]	Overflow	Taphole	Drain	Main dimensions L x W / H [mm]	Scheet
1137594.87	NO	0	Regular	220 x 220 / 120	1\1
Surface area[mm²]	**Sheet Size**	**Scale**		**Project status**	**Revision**
165594.64	A3	1:5		Approved	001

This document must not be copied without our written permission, and the contents thereof must not be imparted to a third party nor be used for any unauthorized purpose. Contravention will be prosecuted.