crosswater

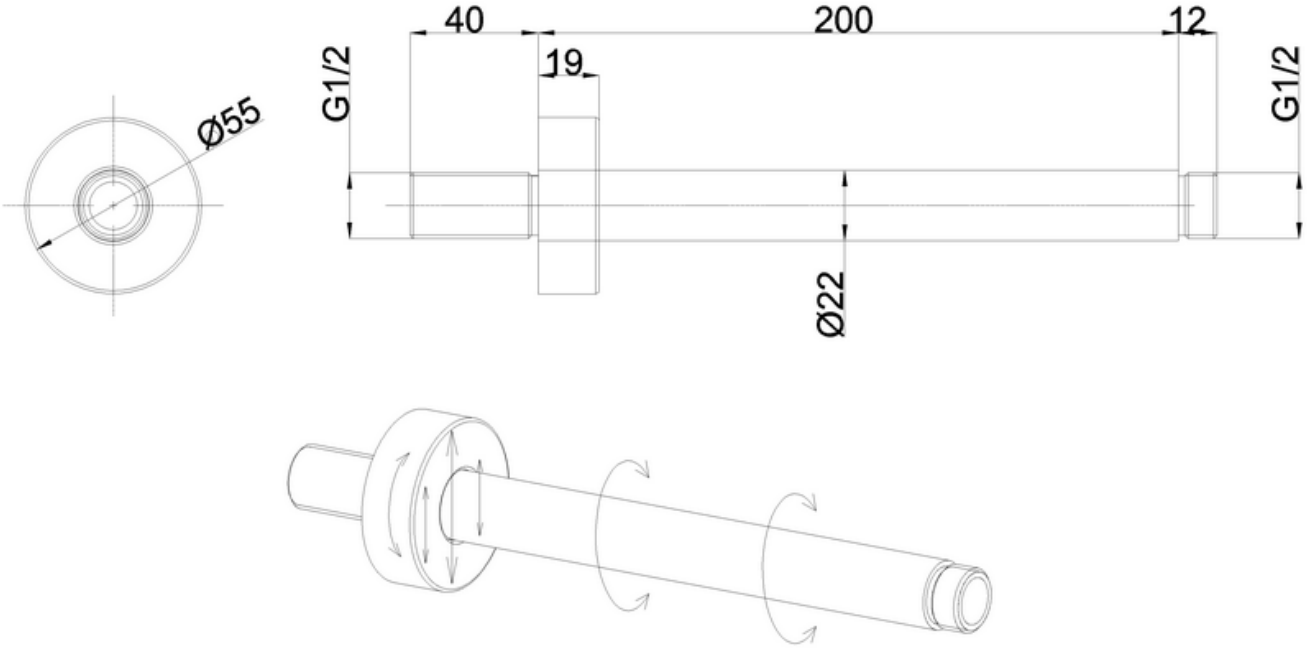

FH620M - Ceiling Shower Arm 200mm Matt Black