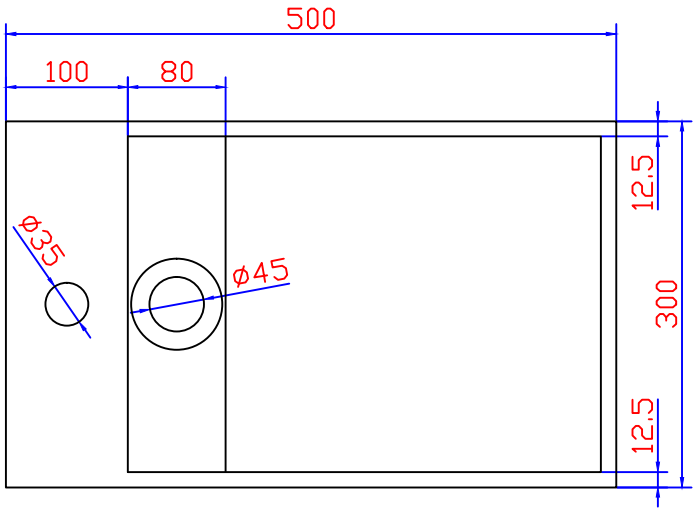
500
100
80
12.5
300
12.5
ø35
ø45

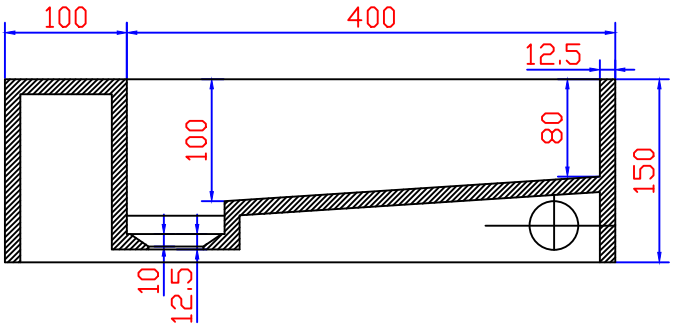
100
400
12.5
100
80
150
10
12.5

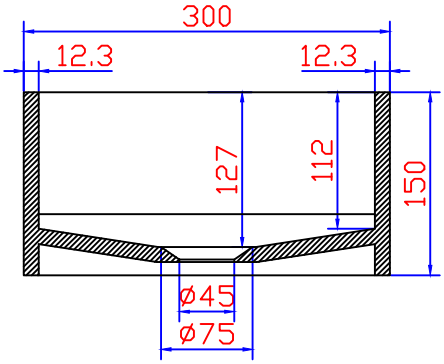
300
12.3
12.3
127
112
150
ø45
ø75

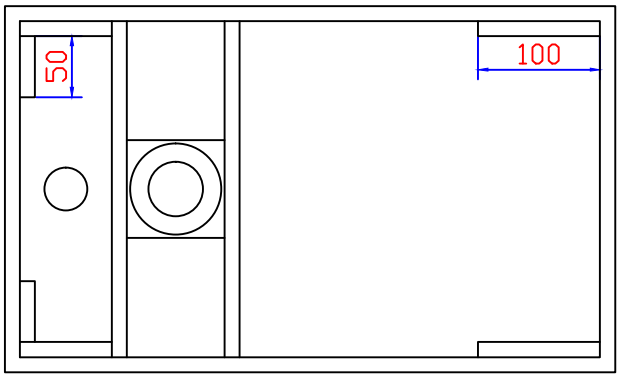
50
100

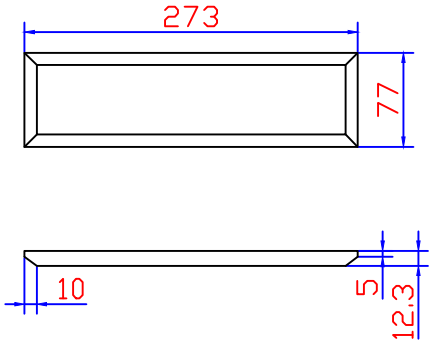
273
77
10
5
12.3

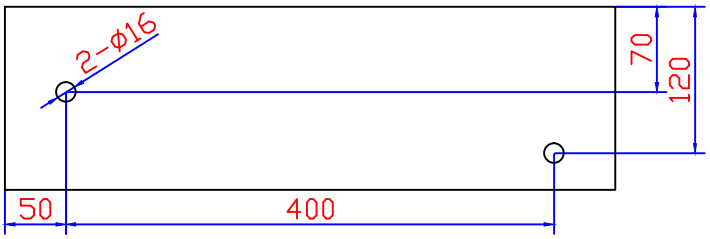
2-ø16
70
120
50
400