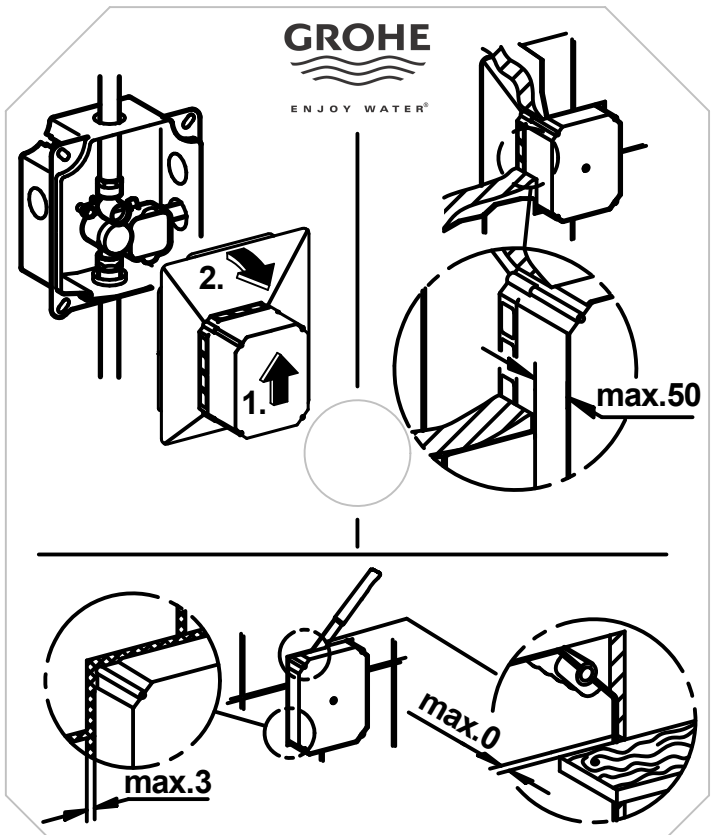

93.372.231/ÄM 224497/03.12