DESIGN + ENGINEERING
GROHE GERMANY

97.518.231/ÄM 237637/07.16

www.grohe.com

Pure Freude an Wasser
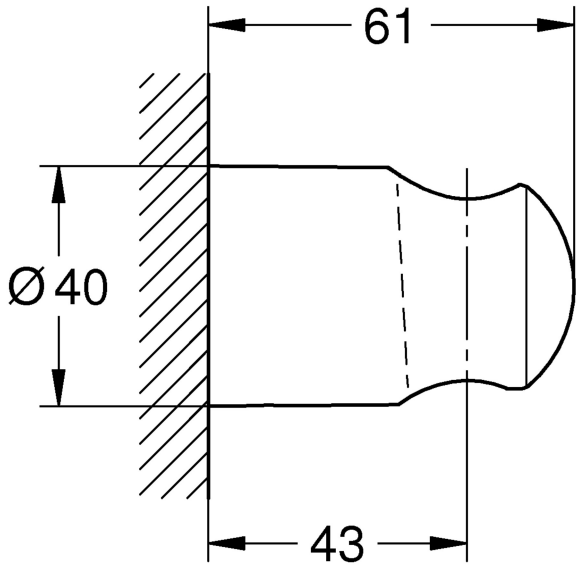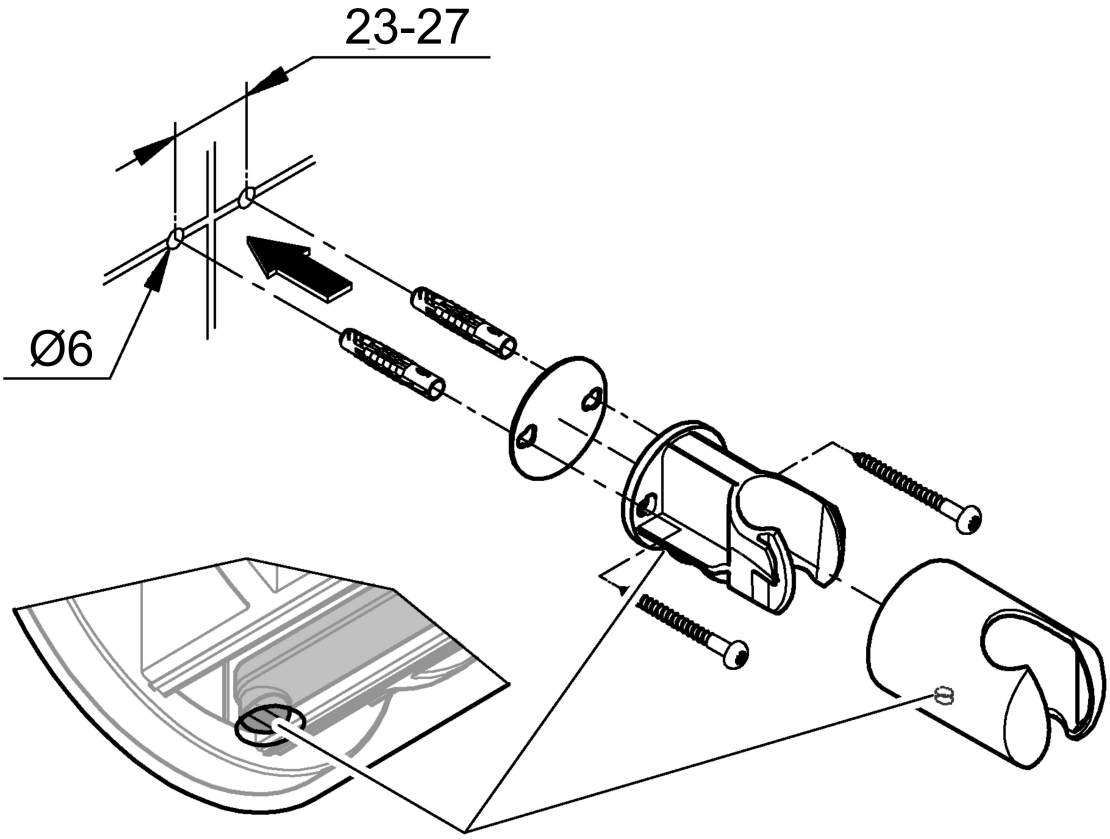
GROHE