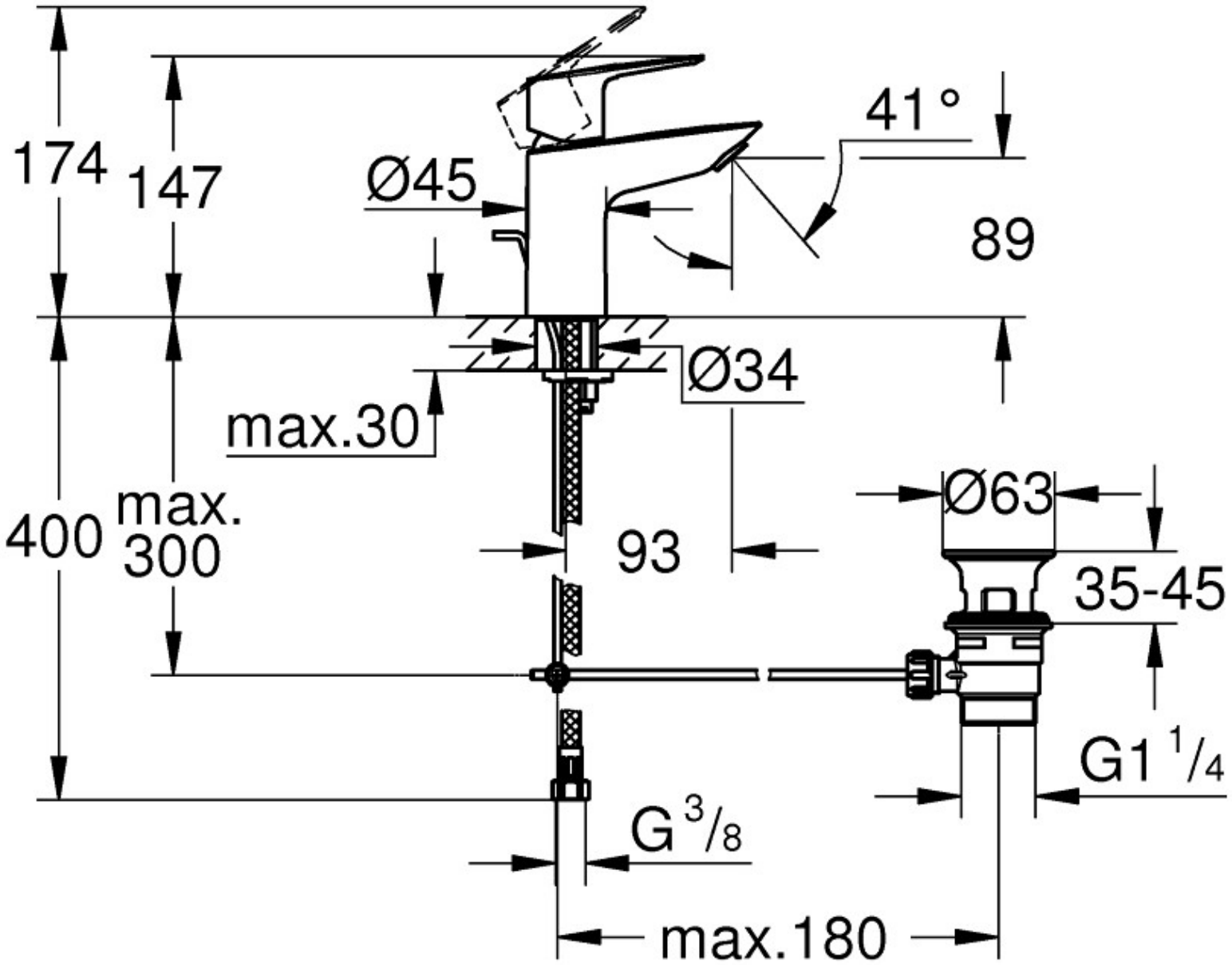
174
147
Ø45
41°
89
Ø34
max.30
400
max.
300
93
Ø63
35-45
G1 1/4
G 3/8
max.180

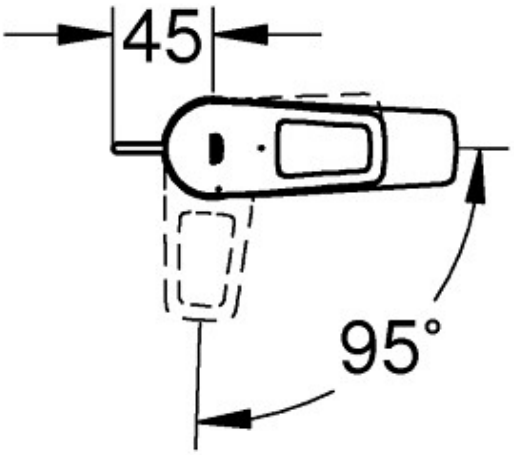
45
95°