GRAZIA

GRC0030/30CR

NOBILI
The Best Technology for Water

SPECIFICATIONS

External thermostatic mixer
Chrome
38° C safety cut-out
Non-return valves
Swivel shower head ø 200 mm
Diverter included into the handle
Sliding swivel hand shower support
Single jet hand shower
150 cm hose

Packaging: 117 x 42 x 8,5 cm / 0,04177 m^3 / 5 kg

CERTIFICATIONS

BELGAQUA

carlo nobili spa rubinetterie - via novara 29, suno (no) italia - office +39 0322 885885 - fax +39 0332 858091 - mail info@grupponobili.it - web nobili.it

GRAZIA

GRC0030/30CR

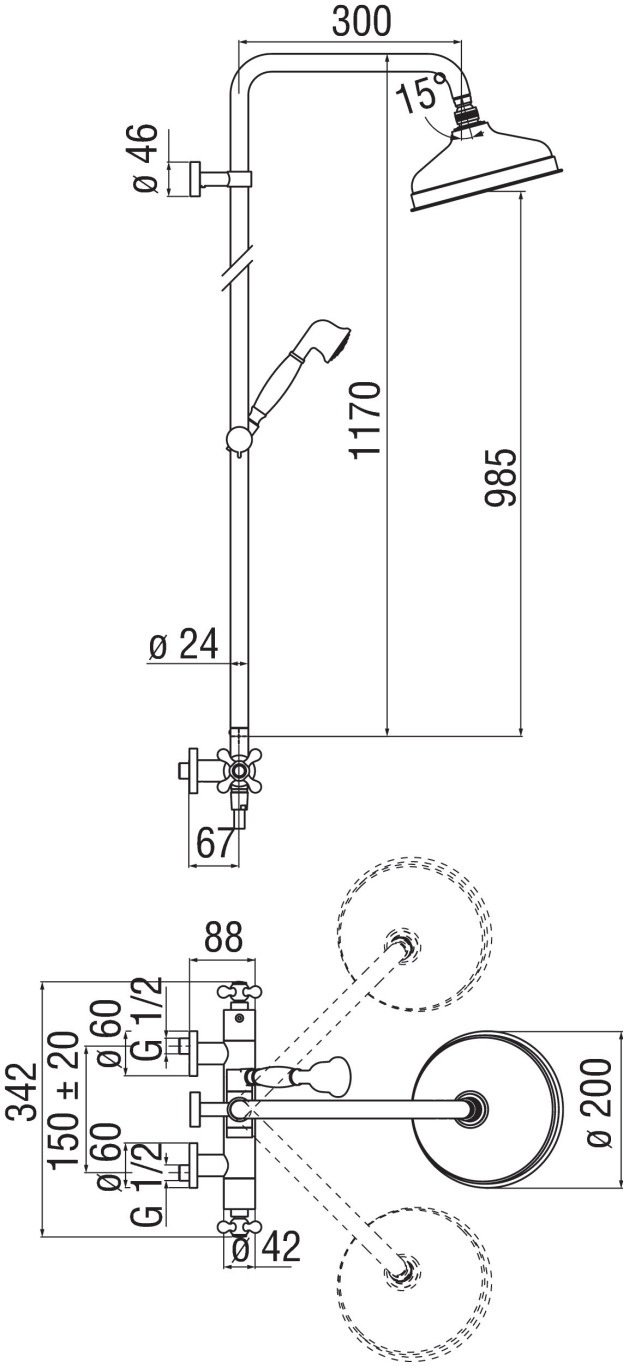

FLOW RATE DIAGRAM: HOT/COLD WATER

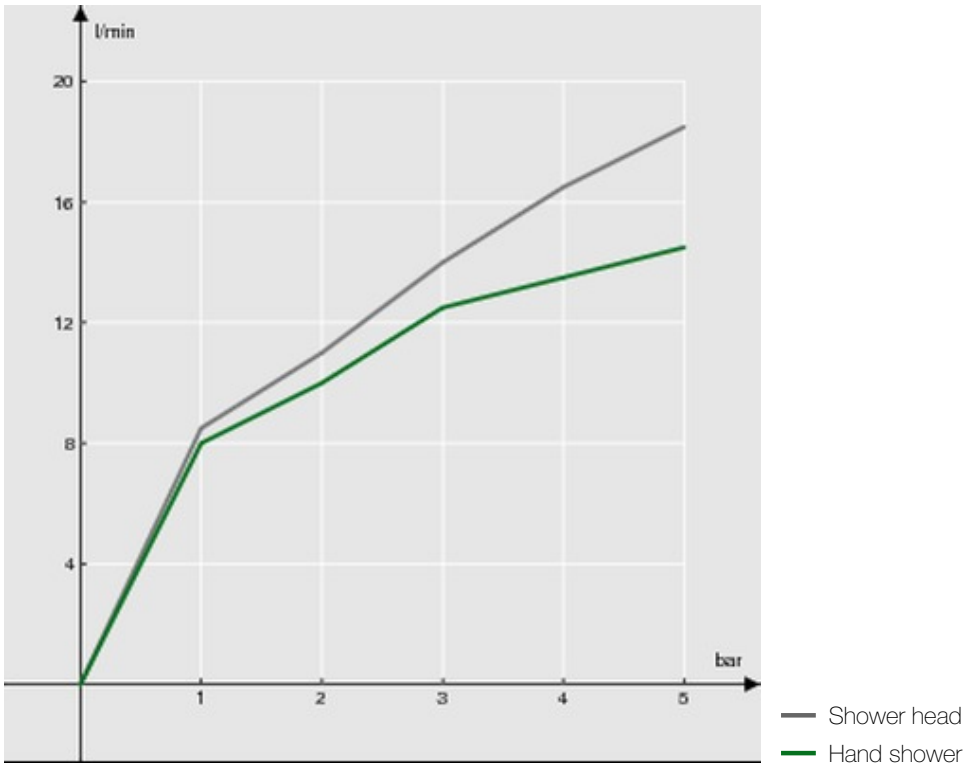
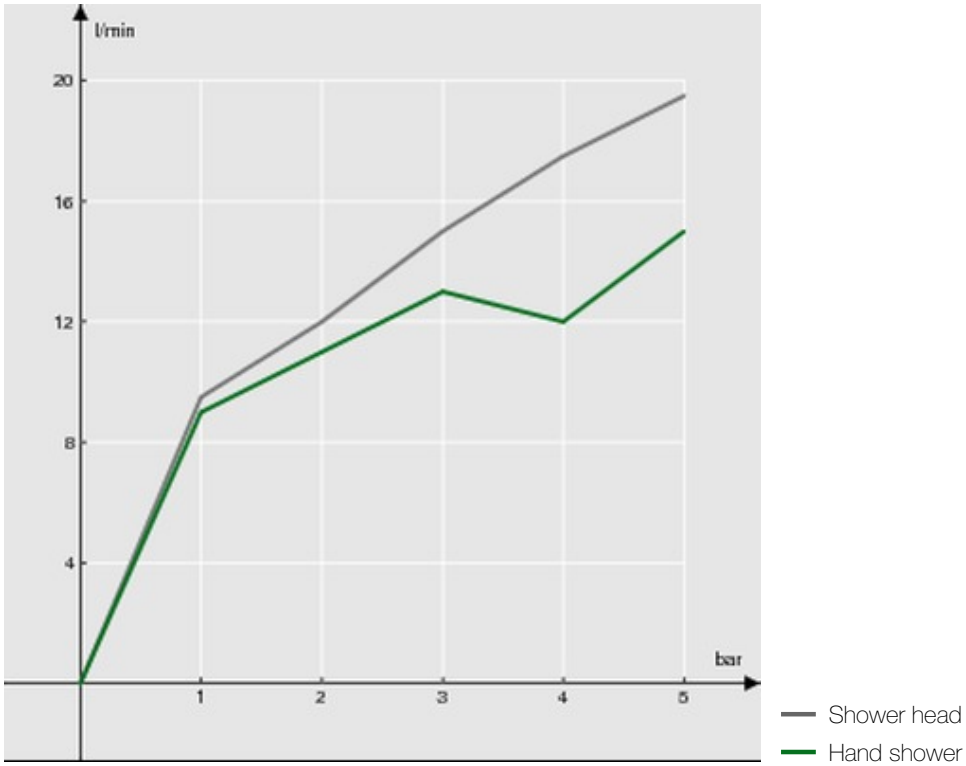
FLOW RATE DIAGRAM: MIXED WATER