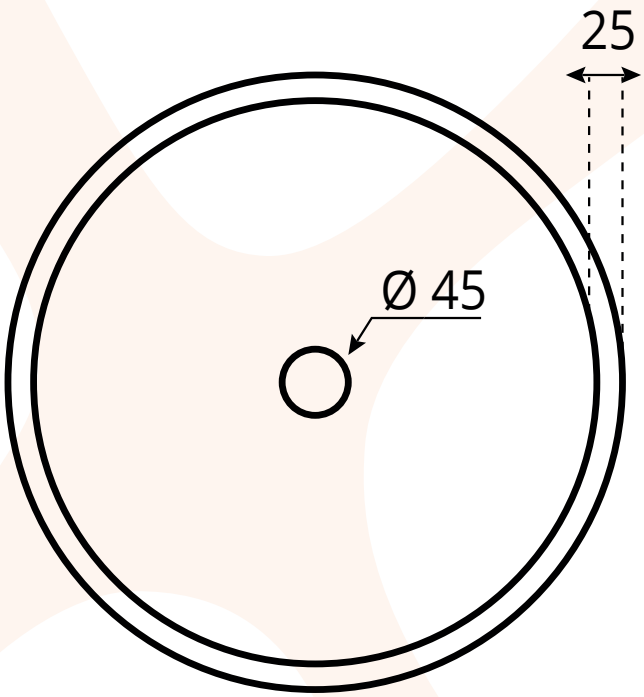

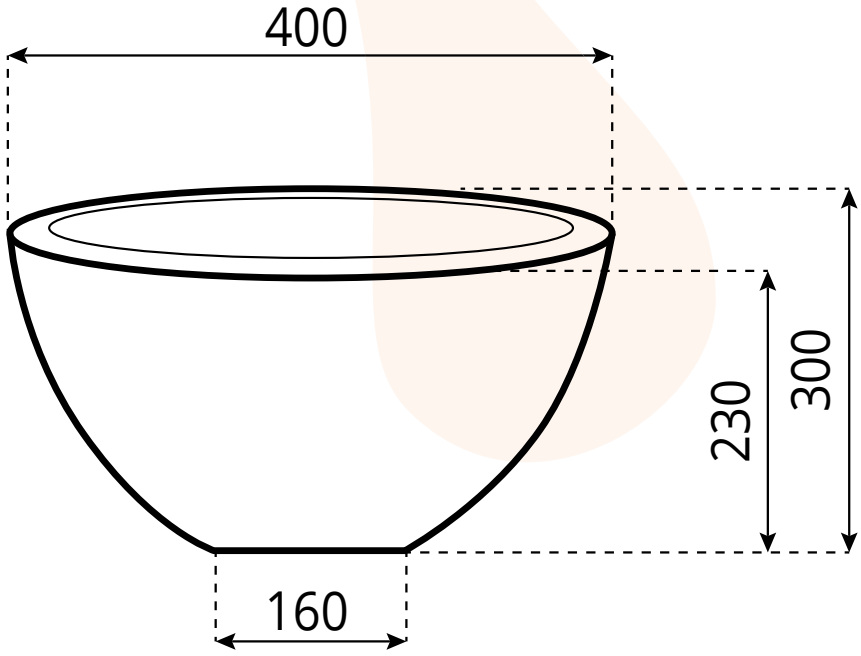

All content on this drawing is protected by intellectual property laws and the sole property of LoooX B.V.

Stone High