ATRIO
DESIGN + ENGINEERING
GROHE GERMANY

99.0990.031/ÄM 240847/01.18

www.grohe.com

Pure Freude an Wasser

GROHE

20 008

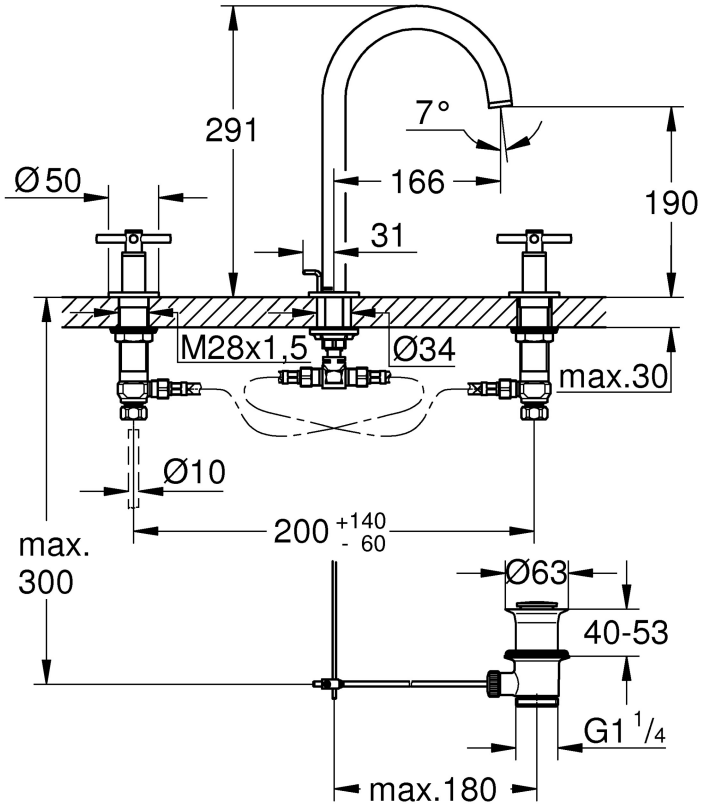

20 009

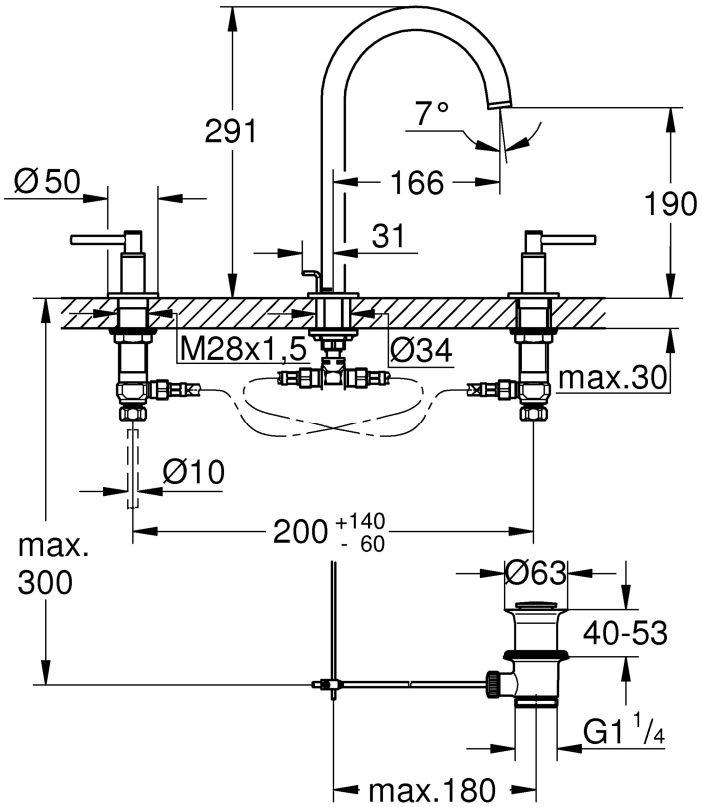

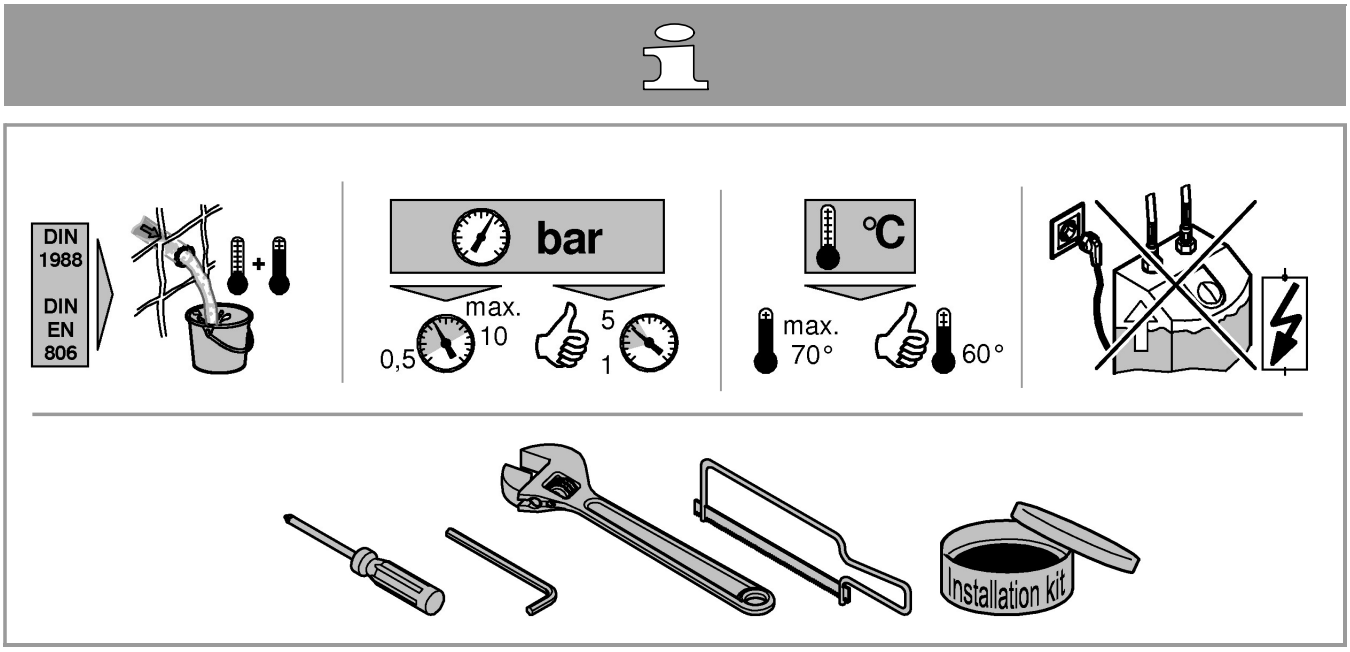
DIN 1988
DIN EN 806
bar
max. 10
0,5
5
1
°C
max. 70°
60°
Installation kit

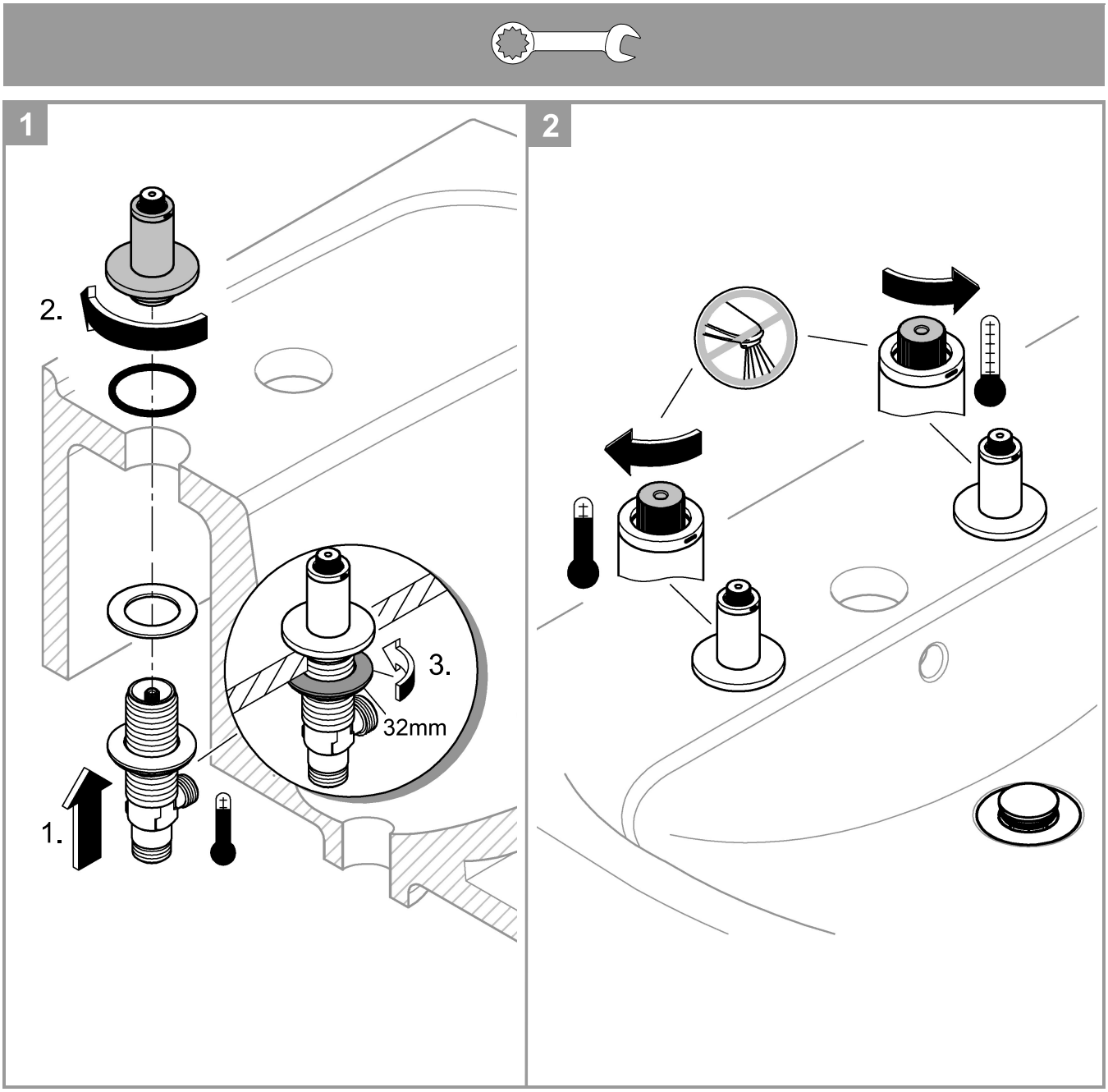
1
2.
3.
32mm
1.
2

3

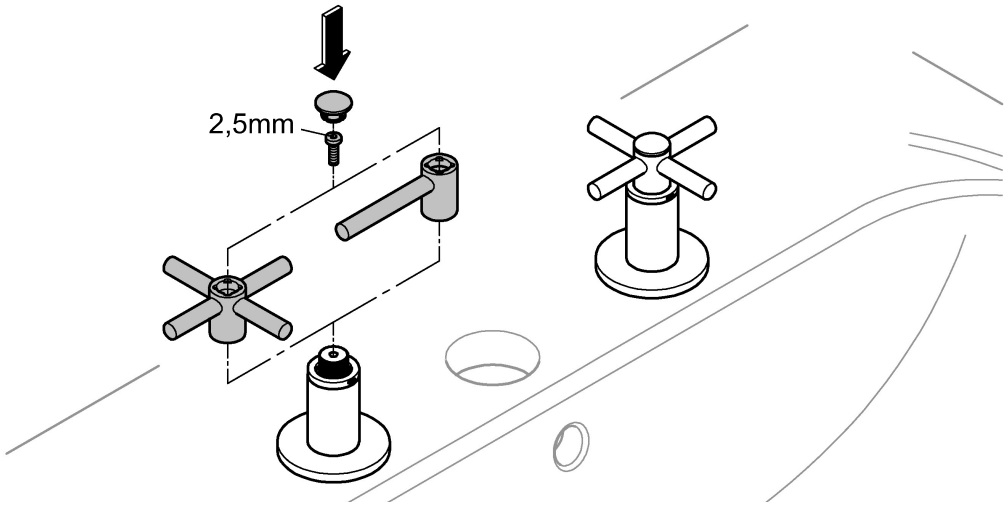

4

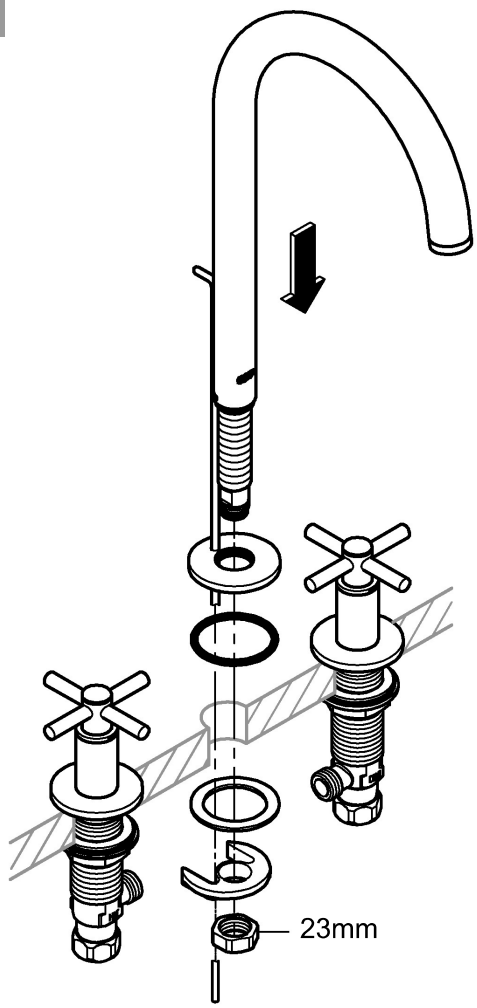

5

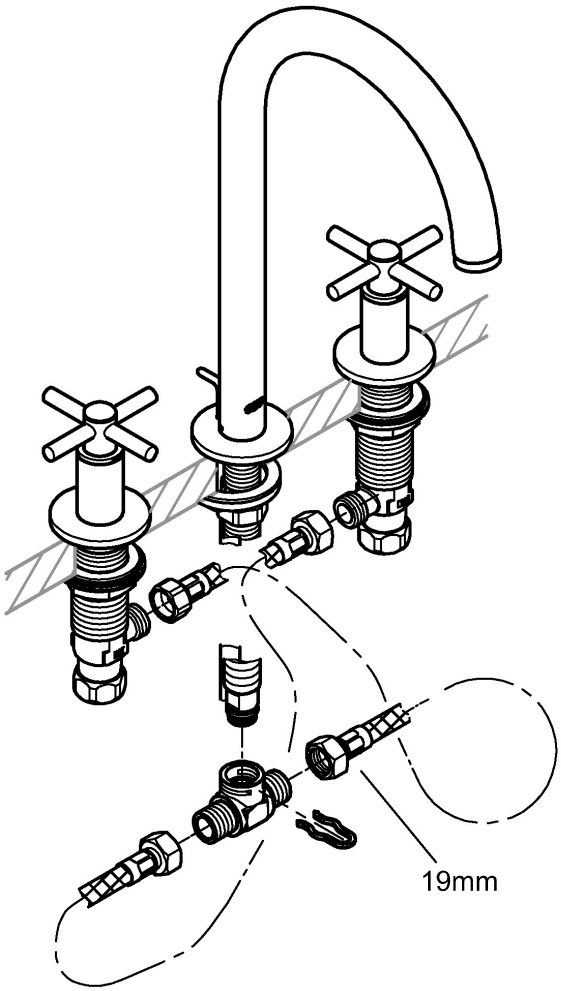

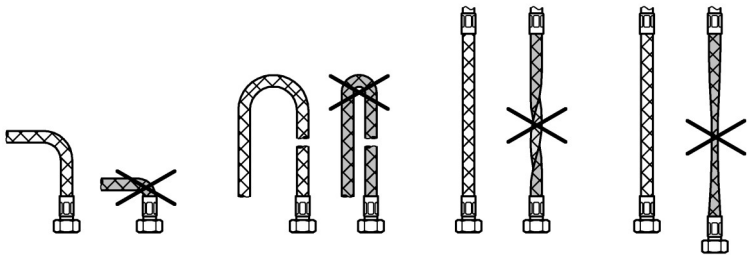

6

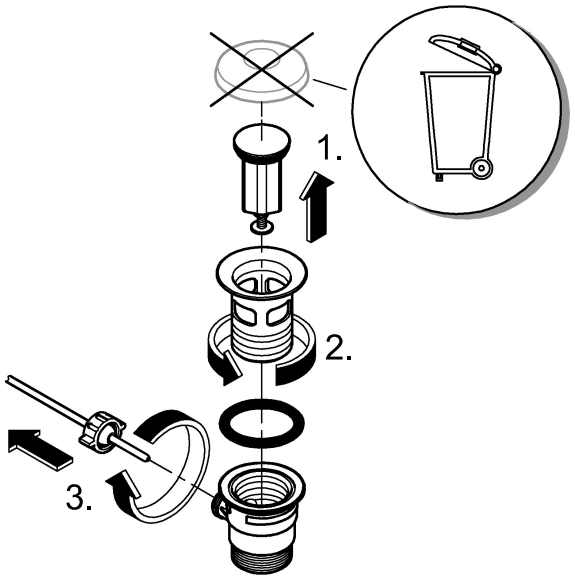

7

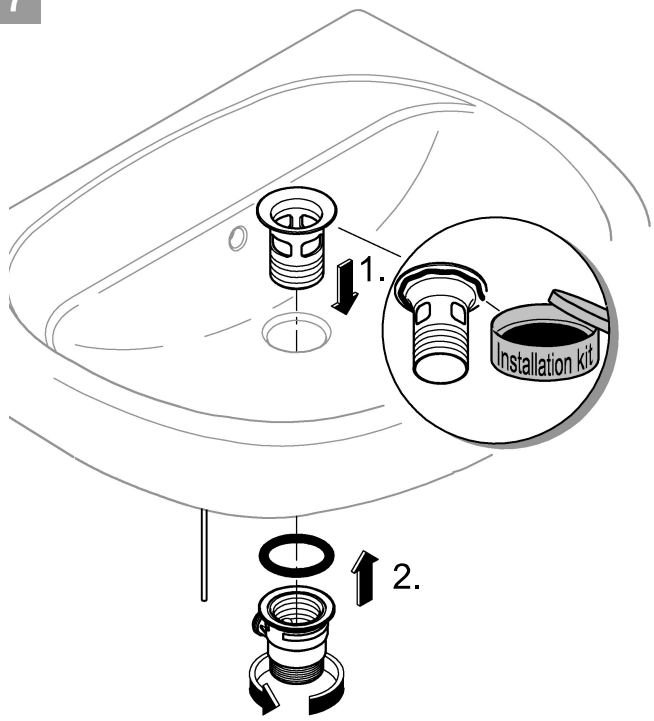

8

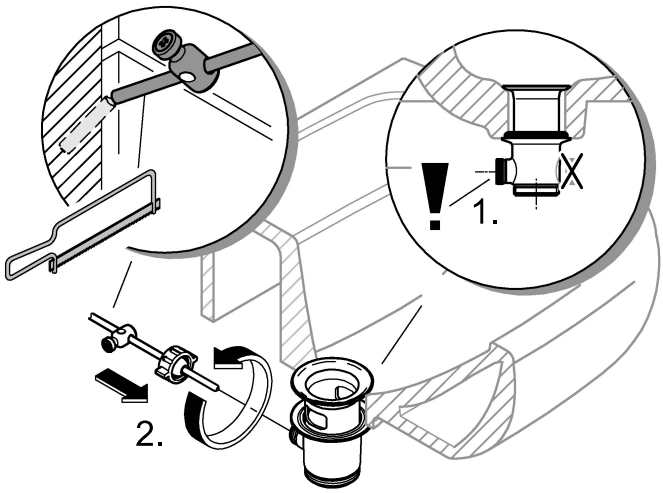

9

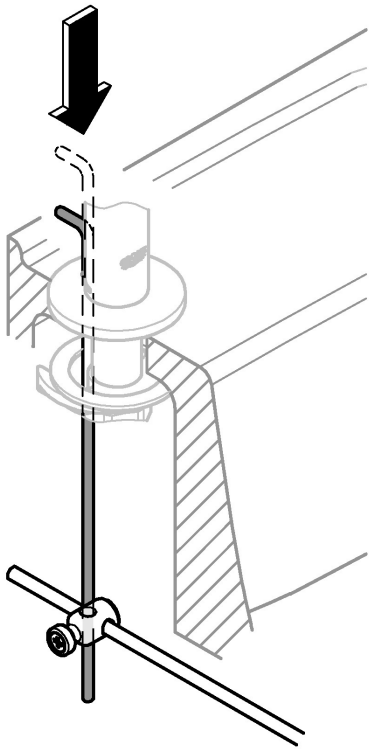

10

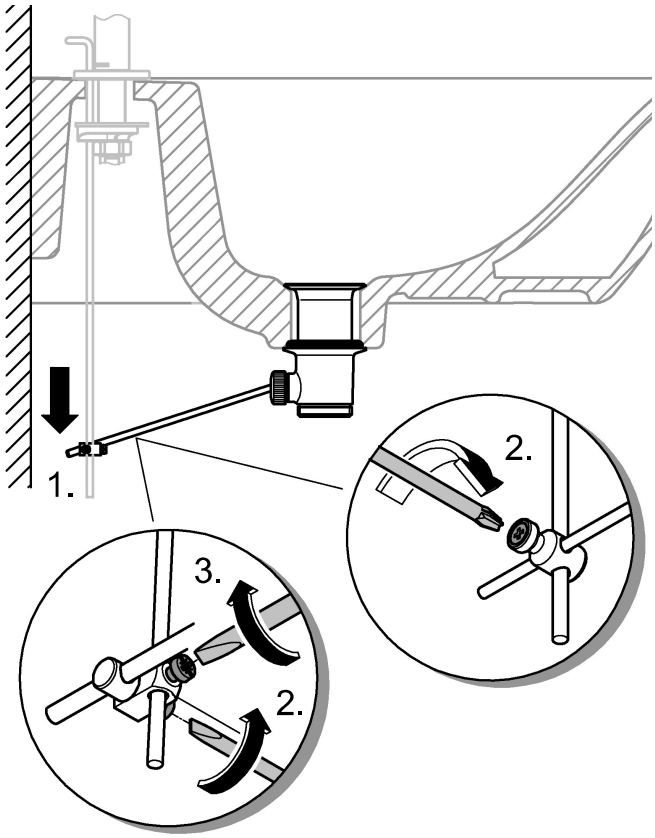

11

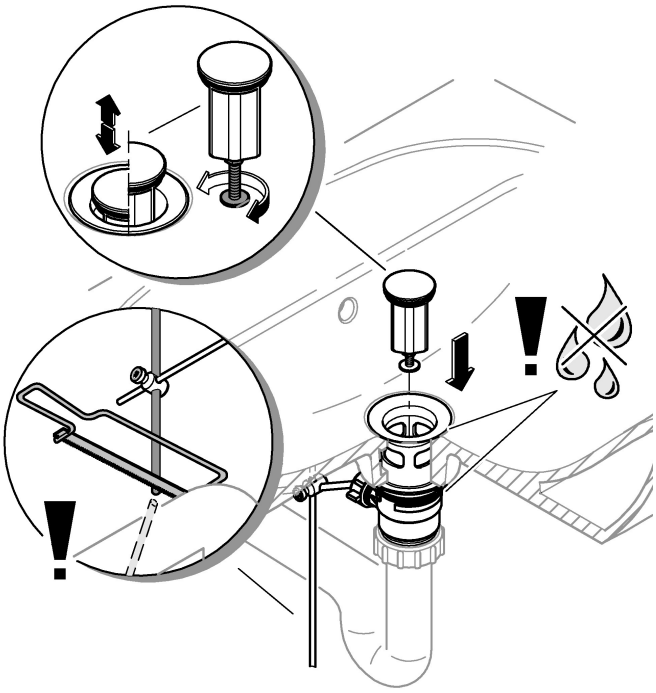

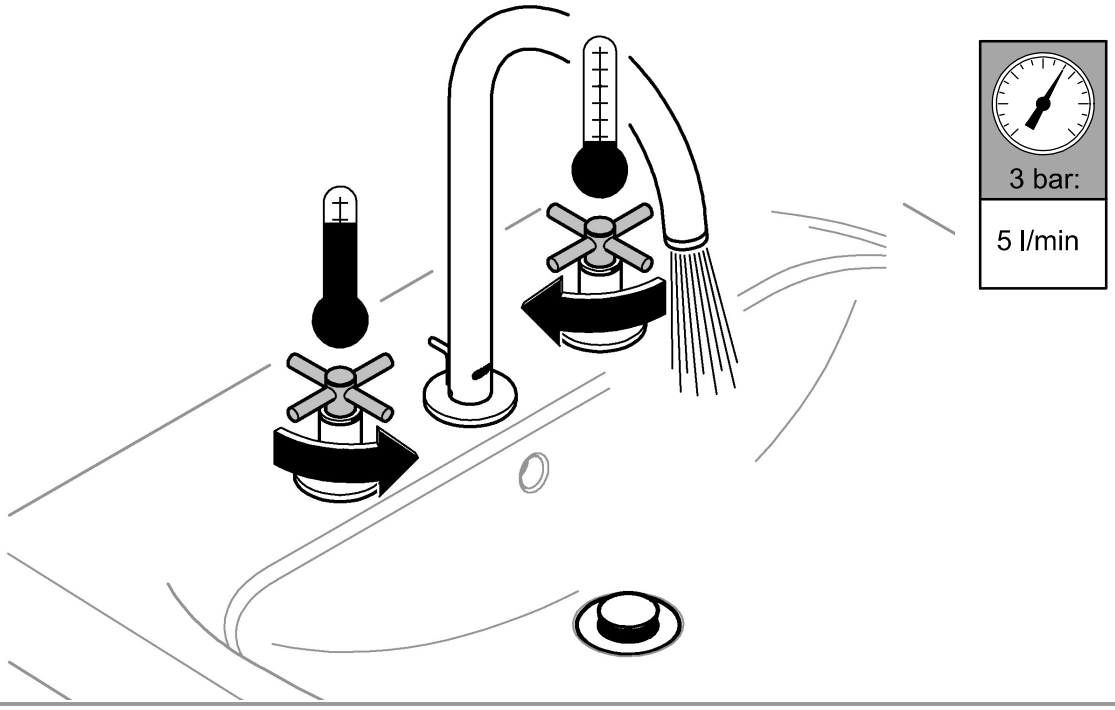

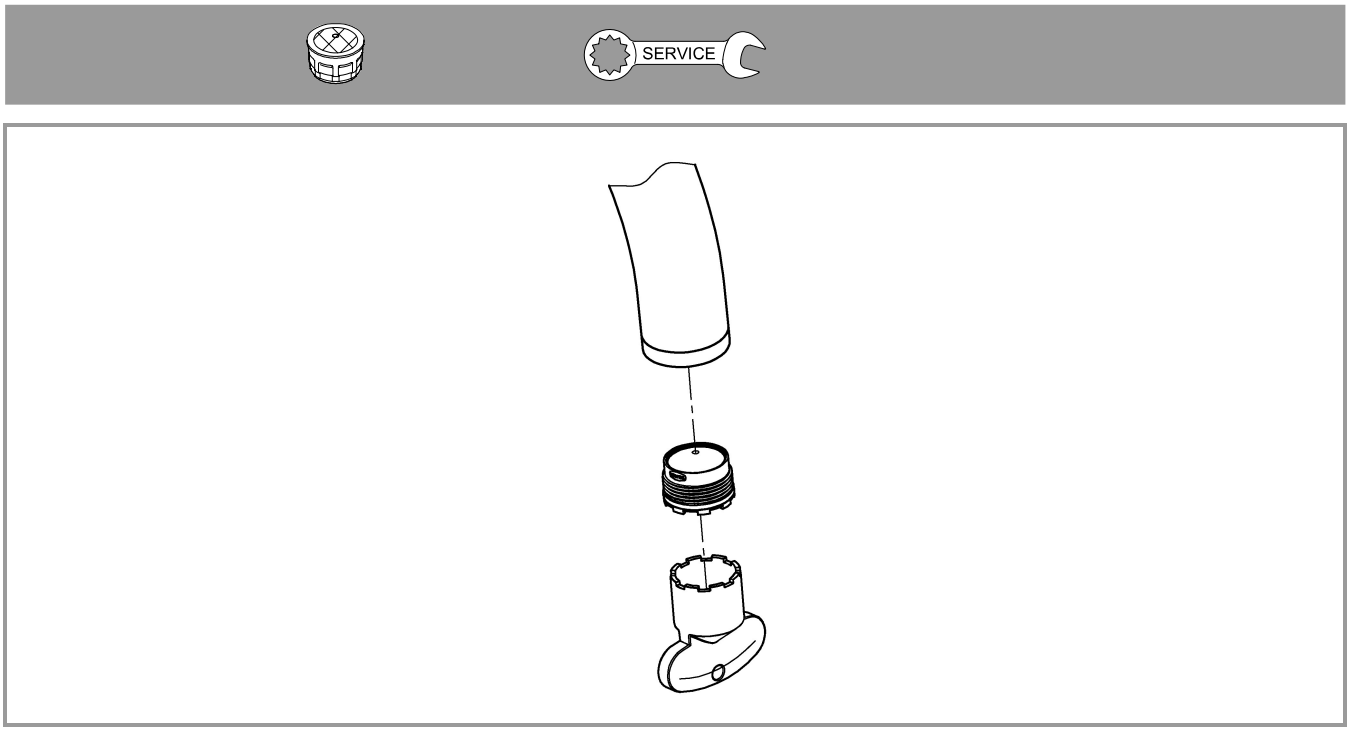

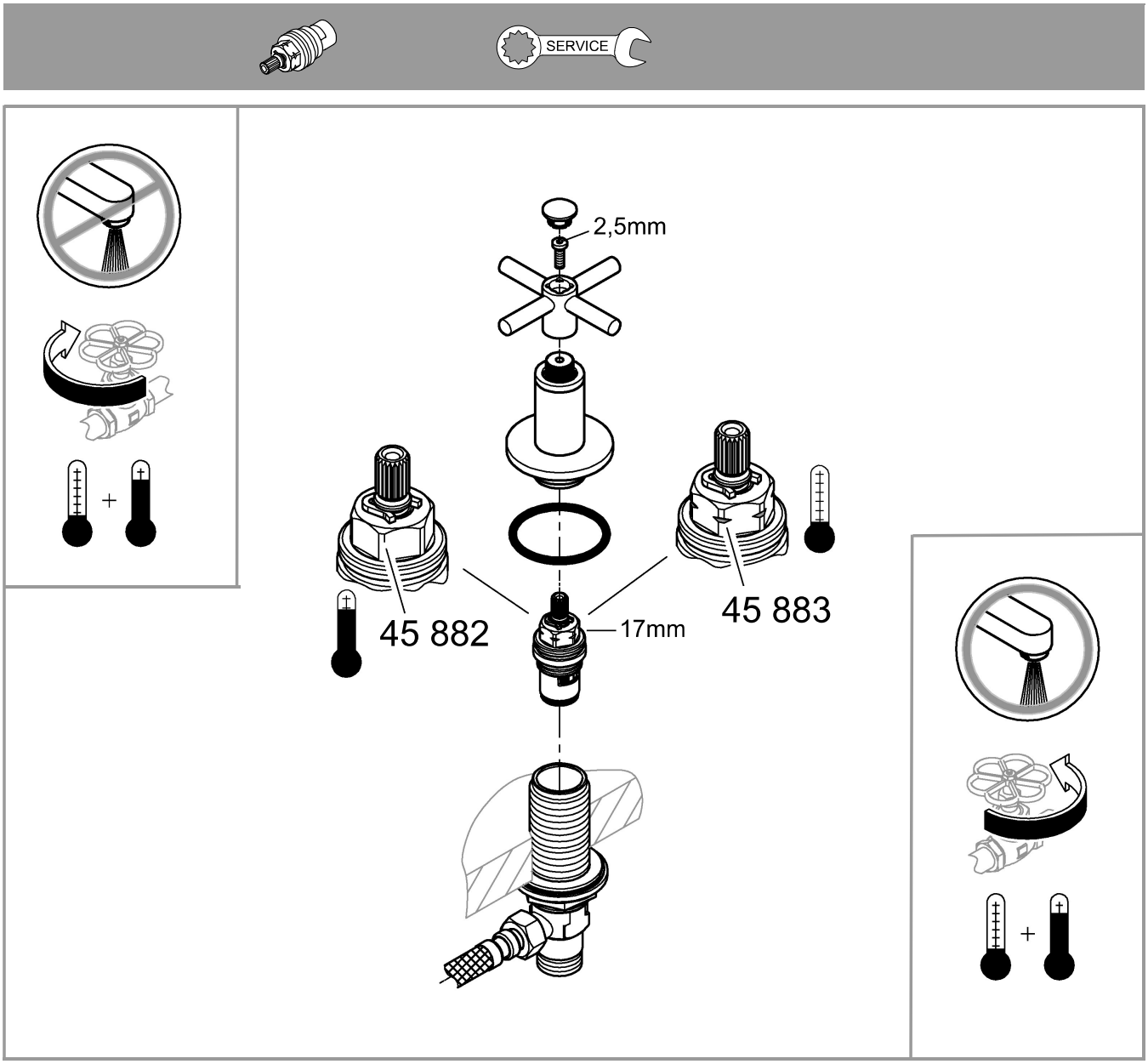
SERVICE
2,5mm
45 882
17mm
45 883

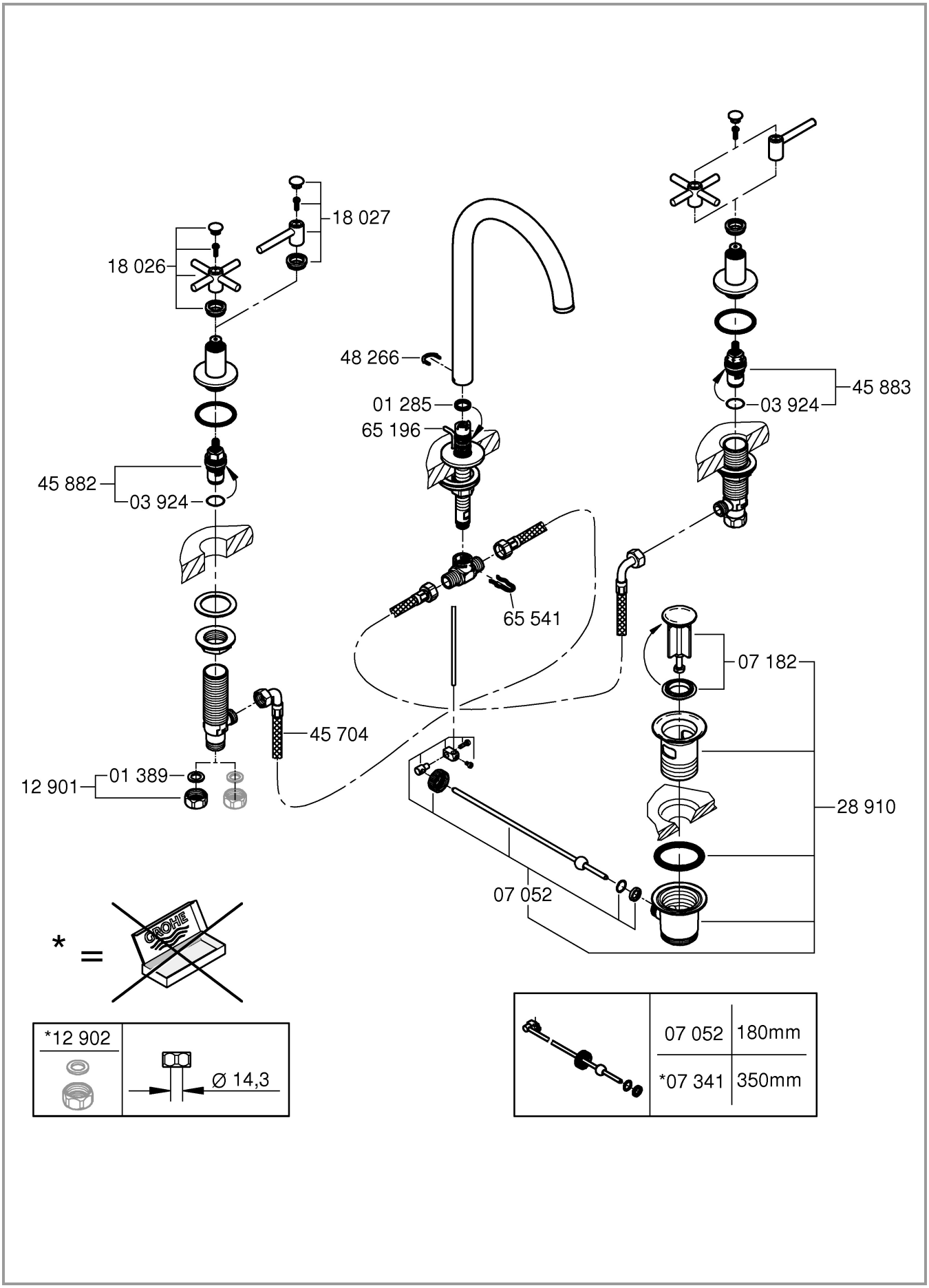
18 027
18 026
48 266
01 285
65 196
45 883
03 924
45 882
03 924
65 541
07 182
45 704
12 901
01 389
28 910
07 052
* =
GROHE
*12 902
Ø 14,3
07 052
180mm
*07 341
350mm

Pure Freude an Wasser

GROHE

D
✆ +49 571 3989 333
helpline@grohe.de

A
✆ +43 1 68060
info-at@grohe.com

AUS
✆ +(61) 1300 54945
grohe_australia@lixil.com

B
✆ +32 16 230660
info.be@grohe.com

BG
✆ +359 2 9719959
grohe-bulgaria@grohe.com

BR
✆ 0800 770 1222
falecom@grohe.com

CAU
✆ +99 412 497 09 74
info-az@grohe.com

CDN
✆ +1 888 6447643
info@grohe.ca

CH
✆ +41 44 877 73 00
info@grohe.ch

CN
✆ +86 4008811698
info.cn@grohe.com

CY
✆ +357 22 465200
info@grome.com

CZ
✆ +358 942 451 390
grohe-cz@grohe.com

DK
✆ +45 44 656800
grohe@grohe.fi

E
✆ +34 93 3368850
grohe@grohe.es

EST
✆ +372 6616354
grohe@grohe.ee

F
✆ +33 1 49972900
sav-fr@grohe.com

FIN
✆ +358 942 451 390
grohe@grohe.fi

GB
✆ +44 871 200 3414
info-uk@grohe.com

GR
✆ +30 210 2712908
nsapountzis@ath.forthnet.gr

H
✆ +36 1 2388045
info-hu@grohe.com

HK
✆ +852 2969 7067
info@grohe.hk

I
✆ +39 2 959401
info-it@grohe.com

IND
✆ +91 1800 102 4475
customercare.in@grohe.com

IS
✆ +354 515 4000
jonst@byko.is

J
✆ +81 3 32989730
info@grohe.co.jp

KZ
✆ +7 727 311 07 39
info-cac@grohe.com

LT
✆ +372 6616354
grohe@grohe.ee

LV
✆ +372 6616354
grohe@grohe.ee

MAL
info-malaysia@grohe.com

MX
✆ 01800 8391200
pregunta@grohe.com

N
✆ +47 22 072070
grohe@grohe.no

NL
✆ +31 79 3680133
vragen-nl@grohe.com

NZ
technicalenquiries@paterson trading.co.nz

P
✆ +351 234 529620
commercial-pt@grohe.com

PL
✆ +48 22 5432640
biuro@grohe.com.pl

RI
✆ 0-800-1-046743
customercare-indonesia@asia.lixil.com

RO
✆ +40 21 2125050
info-ro@grohe.com

ROK
✆ +82 2 1588 5903
info-singapore@grohe.com

RP
✆ +63 2 8938681

RUS
✆ +7 495 9819510
info@grohe.ru

S
✆ +46 771 141314
grohe@grohe.se

SGP
✆ +65 6311 3611
info-singapore@grohe.com

SK
✆ +420 277 004 190
grohe-cz@grohe.com

T
✆ +66 21681368
(Haco Group)
info@haco.co.th

TR
✆ +90 216 441 23 70
GroheTurkey@grome.com

UA
✆ +38 44 5375273
info-ua@grohe.com

USA
✆ +1 800 4447643
us-customerservice@grohe.com

VN
✆ +84 90 9694768
✆ +84 90 9375068
info-vietnam@grohe.com

AL BiH HR KS ME MK SLO SRB
✆ +385 1 2911470
adria-hr@grohe.com

Eastern Mediterranean, Middle East - Africa Area Sales Office:
✆ +357 22 465200
info@grome.com

IR OM UAE YEM
✆ +971 4 3318070
grohedubai@grome.com

Far East Area Sales Office:
✆ +65 6311 3600
info@grohe.com.sg

Latin America:
✆ +52 818 3050626
pregunta@grohe.com

www.grohe.com

2016/09/28