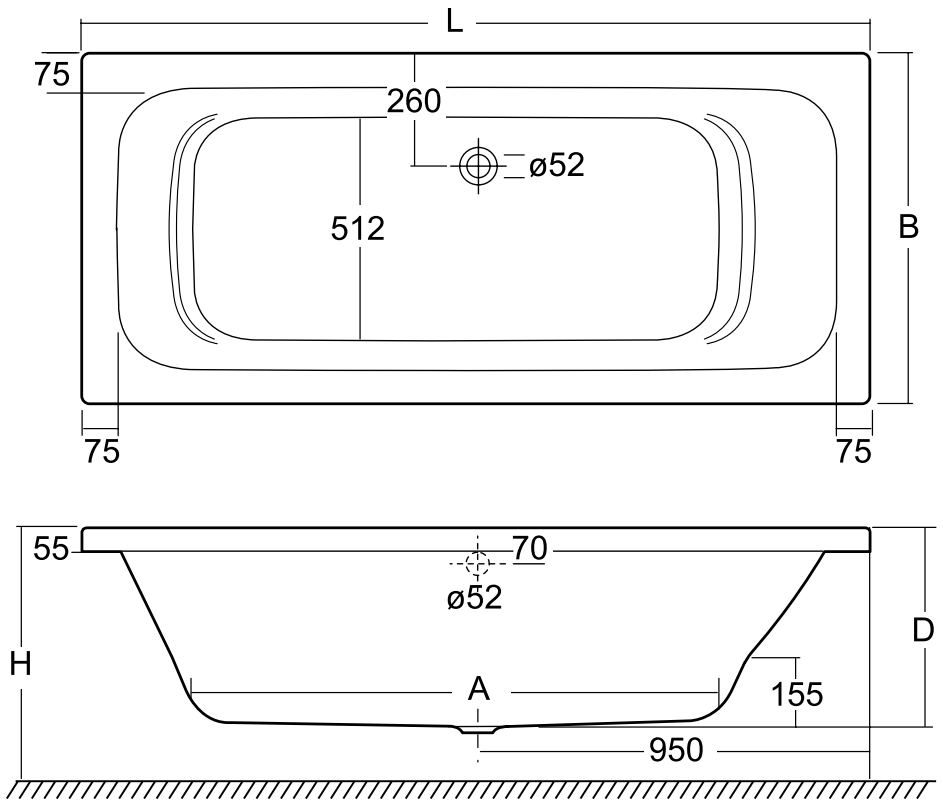

Sphinx 300