New Flush 3, left

aluite, with drain plate

clou
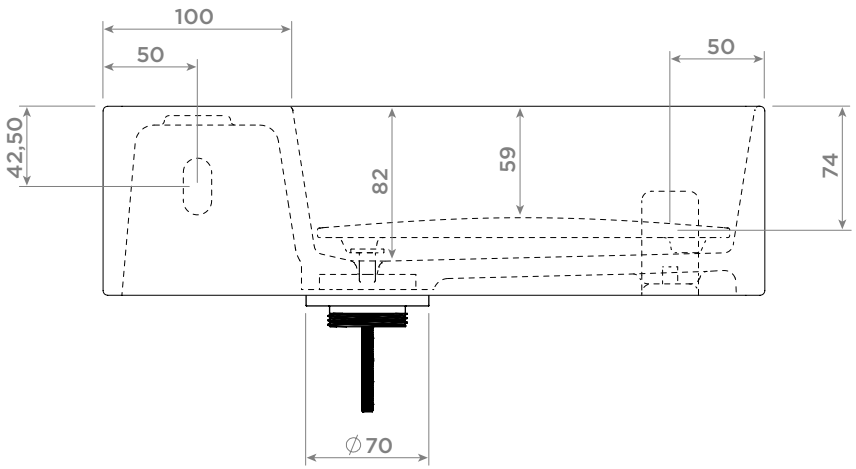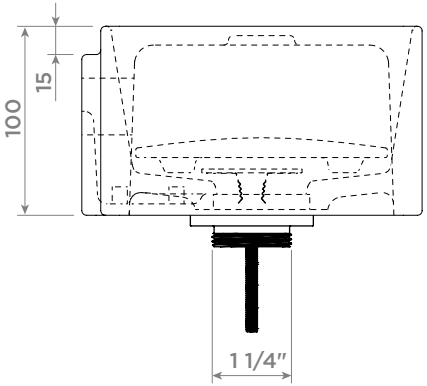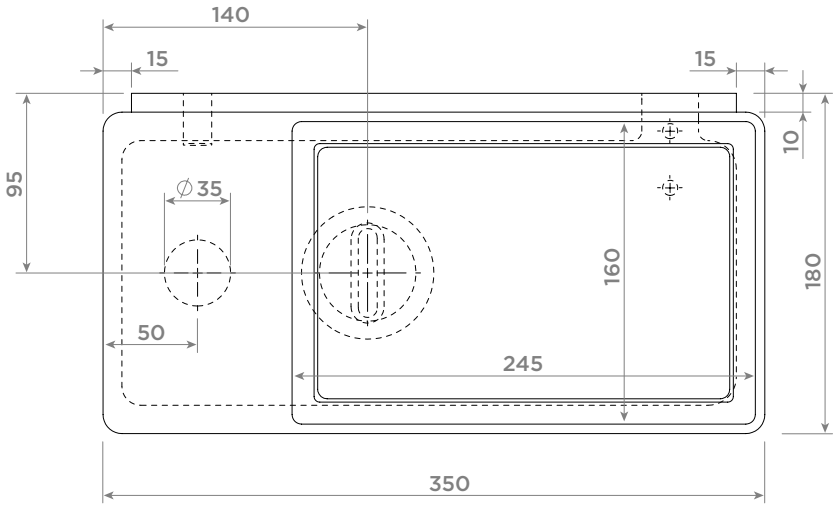
CL/03.13432.02