Hammock
composite

clou
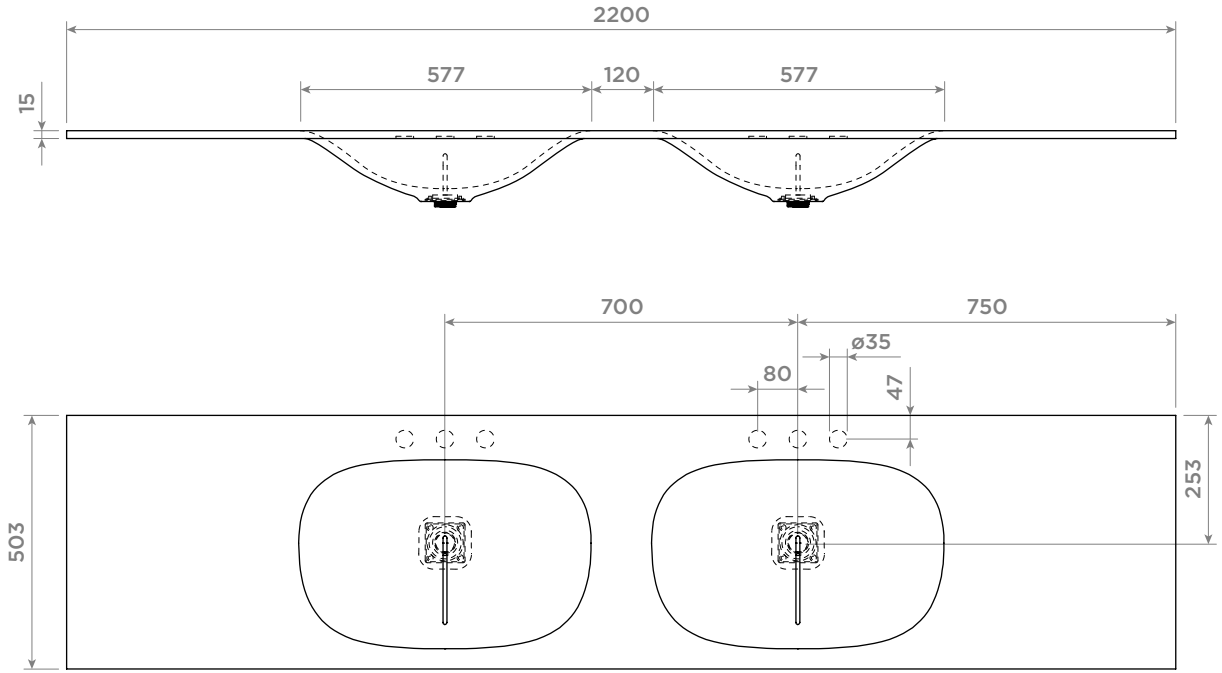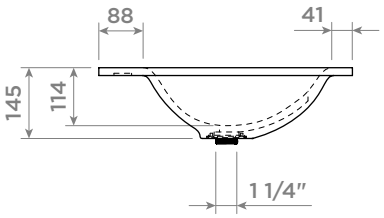
CL/02.13070.43