Hammock - rimless toilet with seat

49cm

clou
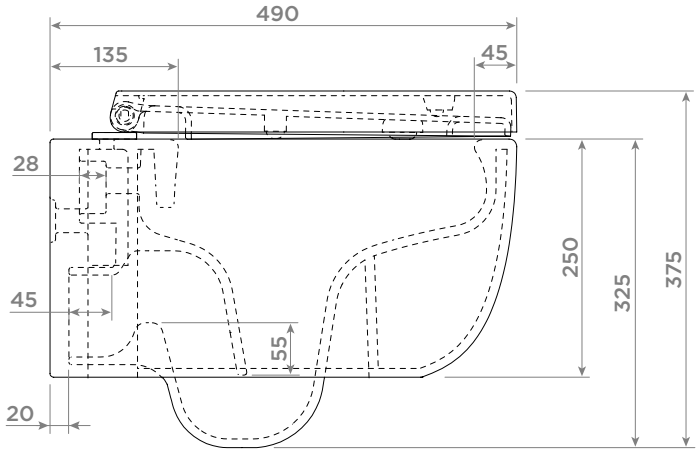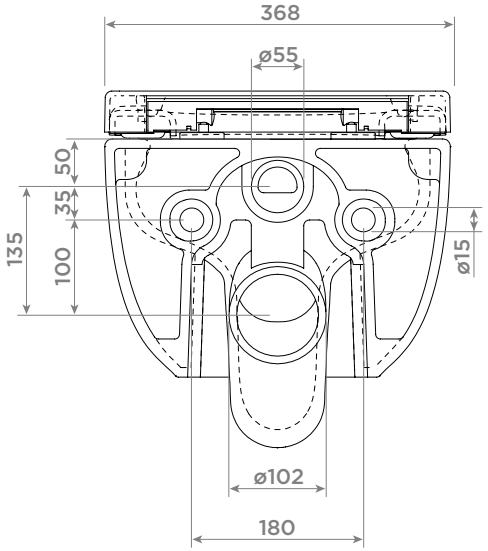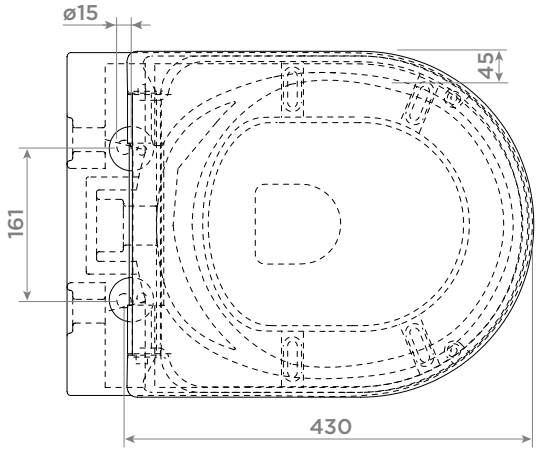
CL/04.01080 - CL/04.01080.01 - CL/04.01080.20 - CL/04.01080.20.01 - CL/04.01080.21 - CL/04.01080.21.01