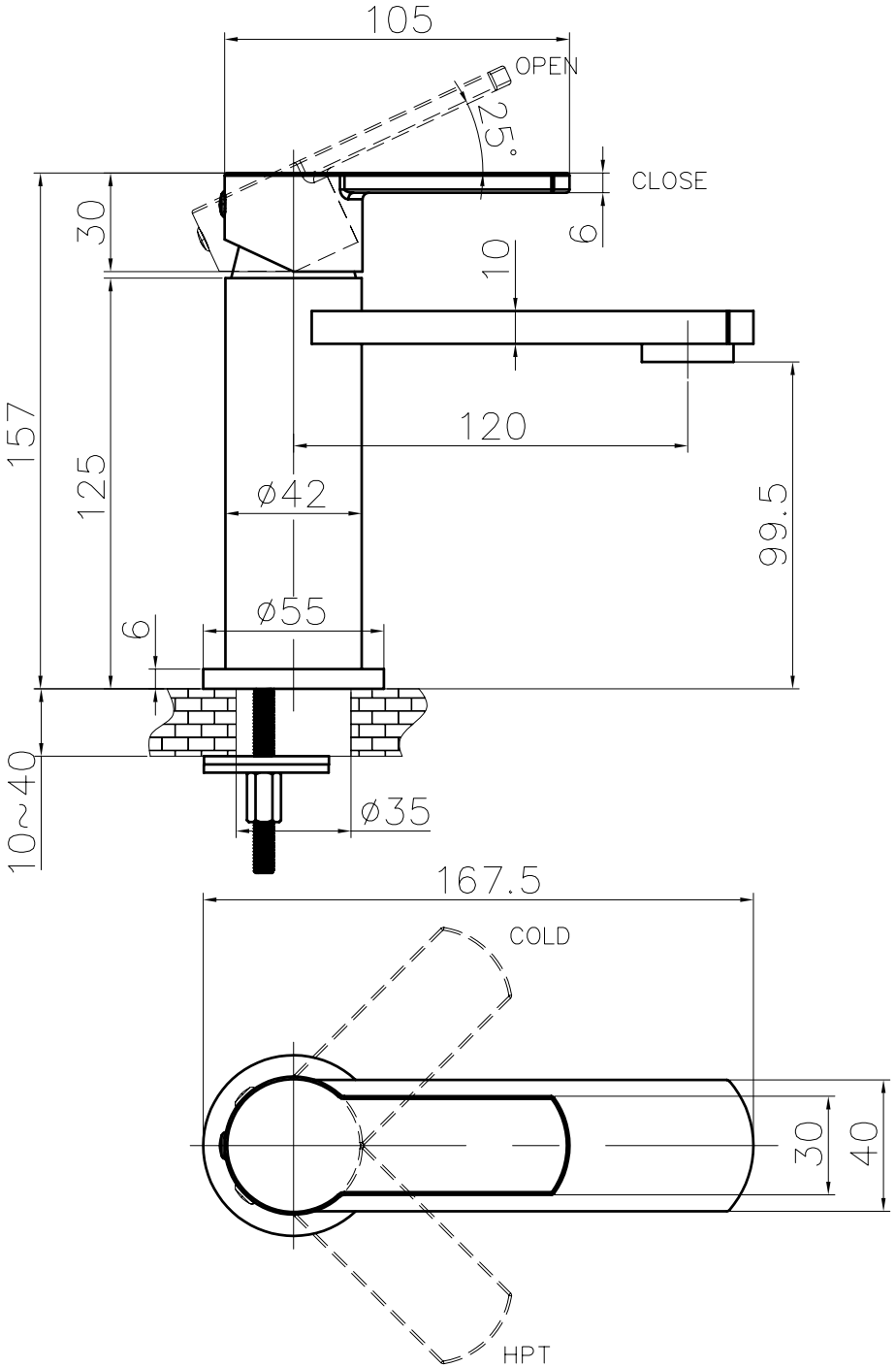

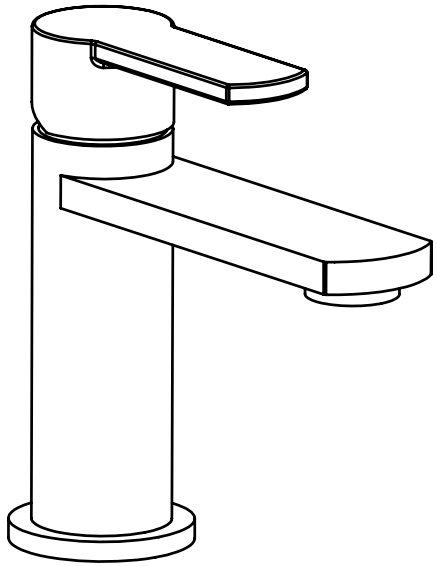

Drawn By (Date):		Item No.:	WP110DNC
Checked By (Date):		Description:	Basin Monoblock With No Pop-up Waste
Approved By (Date):			
crosswater			