crosswater

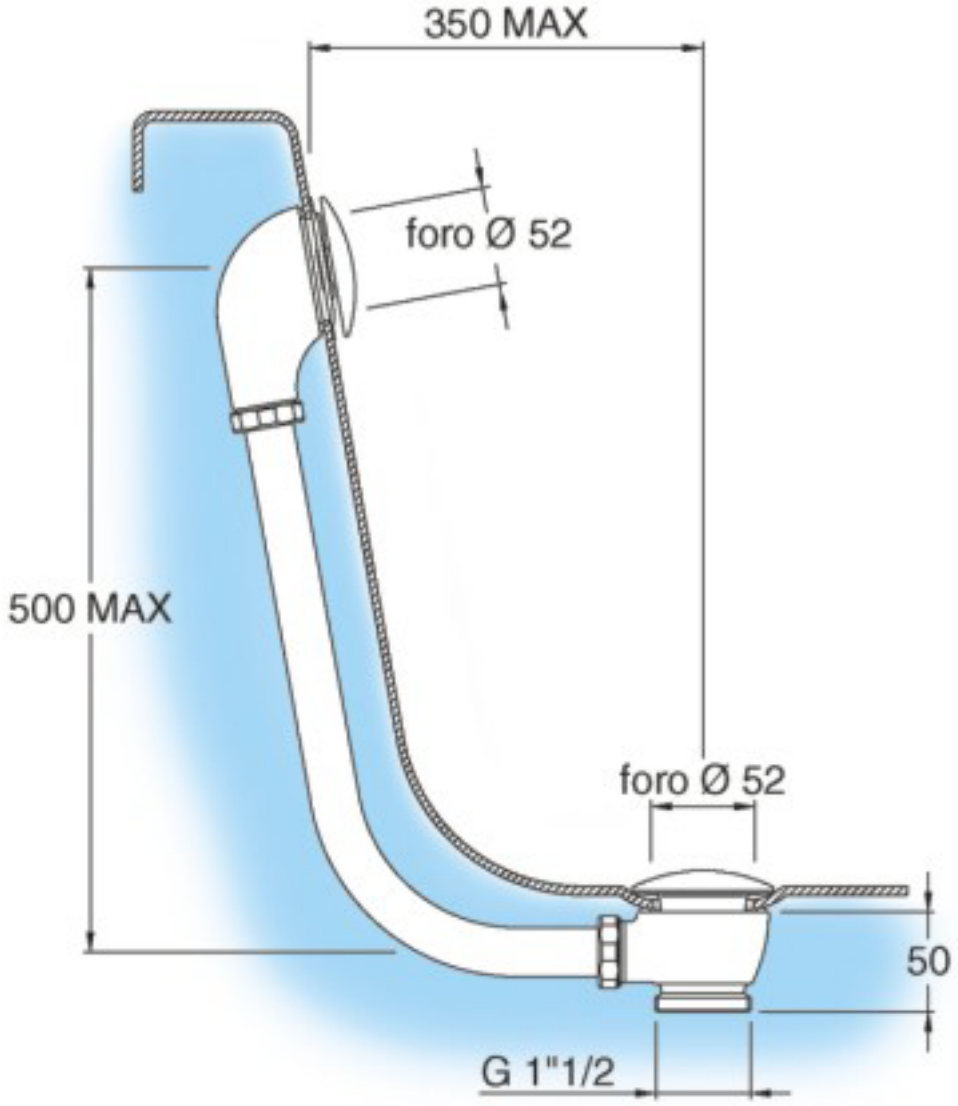

BTW0203C - BATH CLICK CLACK WASTE With Overflow Exposed